WOLTERS ENGINEERING

ENGINEERING, DRAFTING, CONSULTING

15211 97th Road N
West Palm Beach, FL 33412
Ph/Fx: (561) 225-1982

PRODUCT EVALUATION

PRODUCT: LUXBAUM 12 FT WOOD EUROPEAN OUTSWING CASEMENT WINDOWS

MANUFACTURER: LUXBAUM WINDOWS & DOORS
2400 CENTREPARK WEST DRIVE, SUITE 150
WEST PALM BEACH, FL 33409

To all concerned,

The Luxbaum 12 Ft. European Outswing Casement Window , manufactured by Luxbaum Windows & Doors, is a glazed wood casement window set in a wood frame. The window has been tested per TAS 201, 202, and 203 by Hurricane Test Lab, Inc. with results shown in test reports 0271-0519-05, 0271-0206-02, 0271-0721-02, and 0271-1125-02

Technical Documentation:

1. Drawing "CASEMENT WINDOW", signed and sealed by Scott Wolters, PE.
2. Test Reports listed above by Hurricane Test Lab, Inc. signed and sealed by Vinu Abraham, PE.
3. Supplemental calculations to support "CASEMENT WINDOW", signed and sealed by Scott Wolters, PE.

I have reviewed this submittal per the requirements of FAC Product Approval Rule Chapter 61G20-3.005 (4). Based on the limitations listed below and those provided in the documents above, this product meets all the requirements of the 5th Edition (2014) Florida Building Code generally, and chapters 10, 11, 16, 23, and 24 specifically, including the HVHZ provisions.

Limitations: This window is approved for use inside and outside of the HVHZ. It is large and small impact resistant. Shutters are not required.

Overall Dimensions:

Maximum Frame Height:	Varies – See elevations on Sheets 1-9
Maximum Frame Width:	Varies – See elevations on Sheets 1-9.
Maximum Design Pressure:	+65/-70 psf

Glass Options:

9/16" Monolithic Laminated
¼" Annealed
0.100" Saf-Glas Interlayer+
¼" Annealed

9/16" Monolithic Laminated
¼" Heat Strengthened
0.100" Saf-Glas Interlayer+
¼" Heat Strengthened

9/16" Monolithic Laminated
¼" Annealed
0.090" SGP Interlayer++
¼" Annealed

1 1/8" Insulated Laminated
3/16" Heat Strengthened
0.090" SGP Interlayer++
3/16" Heat Strengthened
1/2" Air Space
3/16" Tempered

1" Insulated Laminated
¼" Annealed
0.090" SGP Interlayer++
¼" Annealed
¼" Air Space
3/16" Tempered

+ I have evaluated the Saf-Glas interlayer (NOA# 13-1102.10) referenced above and find that is complies with the requirements of the 5th Edition (2014) Florida Building Code for use in this product.

++ I have evaluated the SentryGlas interlayer (NOA# 11-0624.02) referenced above and find that is complies with the requirements of the 5th Edition (2014) Florida Building Code for use in this product.

Locks:

Siegenia Multi-Point Lock
(Part# 3/45M5 – 3/50M5)
Or
G-U Hardware Multi-Point Lock
(Part# HWC-35 / HWC-40)

Hinges:

G-U Hardware 5020-SM
Or
Simonswerk Baka C2-20

If you have any questions or need more information concerning this approval please contact me.

Thank you,

Scott Wolters
FL PE# 62354

SCOTT WOLTERS
LICENSE
No 62354
STATE OF
FLORIDA
PROFESSIONAL ENGINEER

JUN 15 2015

GENERAL NOTES

1. THIS APPROVAL APPLIES TO IMPACT RESISTANT CASEMENT WINDOWS WITH OR WITHOUT FIXED TRANSOM OR SIDELIGHT WINDOWS, CONSTRUCTED AND GLAZED AS INDICATED HEREIN.
2. ALLOWABLE DESIGN PRESSURES +65/−70 PSF
3. THESE WINDOWS HAVE BEEN DESIGNED AND TESTED TO TAS 201, 202 & 203 PROTOCOLS IN ACCORDANCE WITH THE REQUIREMENTS OF THE 5TH EDITION (2014) FLORIDA BUILDING CODE (FBC) INCLUDING THE HIGH VELOCITY HURRICANE ZONE (HVHZ) PROVISIONS.
4. THESE WINDOWS AS SHOWN HEREIN ARE LARGE AND SMALL MISSILE IMPACT RATED, SHUTTERS ARE NOT REQUIRED.
5. WOOD OR MASONRY OPENINGS, 1x OR 2x WOOD BUCKS, AND BUCK FASTENERS, BY OTHERS, SHALL BE PROPERLY DESIGNED & INSTALLED TO TRANSFER WIND LOADS IMPOSED BY THE GLAZING SYSTEM TO THE BUILDING STRUCTURE.
6. ANCHOR TYPE, SIZE, SPACING, AND EMBEDMENT SHALL BE AS SPECIFIED IN THESE DRAWINGS. ANCHOR EMBEDMENT TO SUBSTRATE SHALL BE BEYOND WALL DRESSING OR STUCCO.
7. ALL FASTENERS PENETRATING INTO PRESSURE TREATED WOOD SHALL BE CAPABLE OF PREVENTING CORROSION DUE TO REACTION WITH PRESSURE TREATMENT CHEMICALS.
8. DISSIMILAR MATERIALS THAT COME INTO CONTACT SHALL BE PROTECTED TO PREVENT REACTIONS IN ACCORDANCE WITH FBC CHAPTERS 20 AND 23.
9. A WIND LOAD DURATION FACTOR Cd = 1.6 WAS USED FOR THE ANALYSIS OF WOOD SCREWS ONLY.
10. THE MERBAU WINDOWS LISTED IN THIS APPROVAL ARE CONSTRUCTED OF A NATURALLY DURABLE SPECIES (SPECIE SPECIFIC GRAVITY = 0.68) IN COMPLIANCE WITH FBC CHAPTER 23. OTHER NATURALLY DURABLE WOOD SPECIES OF EQUAL OR GREATER STRENGTH MAY BE SUBSTITUTED FOR ALL WOOD COMPONENTS.
11. MEMBERS NOTCHED AS NEEDED TO FIT HARDWARE AS SHOWN HEREIN.
12. ALL RAISED PANELS AND/OR GLAZING AS SHOWN IN GLAZING DETAILS ON SHEET 13, AND ALL HARDWARE TYPES IN THE IN THE HARDWARE NOTES BELOW MAY BE USED IN ANY WINDOW CONFIGURATION.
13. SUBSTRATES SHALL MEET THE MINIMUM STRENGTH REQUIREMENTS AS SHOWN IN INSTALLATION ANCHOR REQUIREMENTS TABLE ON SHEET 2. CONCRETE OR MASONRY SUBSTRATES SHALL NOT BE CRACKED. FOR INSTALLATION TO METAL SUBSTRATES, ANCHORS SHALL BE LONG ENOUGH TO BE FULLY THREADED THROUGH THE METAL THICKNESS WITH AN ADDITIONAL 3/16" MIN. OF THREADS BEYOND.

DESIGN PRESSURE

+65/-70 PSF

APPROVED SHAPES

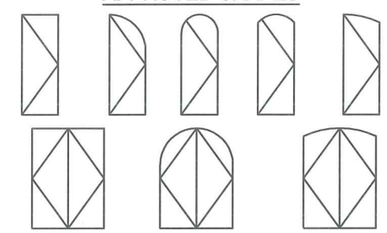

NOTES:
1. OTHER SHAPES MAY APPLY PROVIDED THEY ARE SIMILAR TO THOSE SHOWN & HAVE CORNER CONSTRUCTION AS DESCRIBED ON SHEET 1.
2. ALL SHAPED UNITS MUST FIT INSCRIBED INTO THE ALLOWABLE RECTANGULAR UNITS & BE GOVERNED BY THE ALLOWABLE PRESSURE OF THE RESPECTIVE RECTANGULAR UNIT.

TYPICAL CORNER CONSTRUCTION

FRAME CORNERS: VERTICAL JAMB ENDS ARE COPED AND BUTTED TO HORIZONTAL JAMBS WITH JOINT FULLY GLUED WITH WOOD GLUE AND DOWELED WITH (3) 1/2" DIA. x 3 5/16" LONG MERBAU WOOD DOWELS.

PANEL CORNERS (PANEL HEIGHT ≤ 120 1/16"): HORIZONTAL SASH ENDS ARE COPED AND BUTTED TO VERTICAL SASH PROFILES WITH JOINT FULLY GLUED WITH WOOD GLUE AND DOWELED WITH (2) 1/2" DIA. x 3 7/16" AND (1) 5/8" DIA. x 3 1/4" MERBAU WOOD DOWELS.

PANEL CORNERS (PANEL HEIGHT > 120 1/16"): HORIZONTAL SASH ENDS ARE COPED AND BUTTED TO VERTICAL SASH PROFILES WITH JOINT FULLY GLUED WITH WOOD GLUE AND DOWELED WITH (4) 1/2" DIA. x 3 7/16" AND (3) 5/8" DIA. x 3 1/4" MERBAU WOOD DOWELS.

HARDWARE NOTES (THIS SHEET):

HINGES: (#15) G-U HARDWARE 5020-SM LOCATED 8-3/8" (MAX) FROM CORNERS OR SPRINGLINE AND 27-3/8" O.C. (MAX), OR (#16) SIMONSWERK BAKA C2-20WF LOCATED 6" (MAX) FROM CORNERS OR SPRINGLINE AND 26-3/8" O.C. (MAX).

LOCKS: (#17) SIEGENIA NO. 3/45M5 OR (#18) G-U HWC-35 MULTI-POINT LOCKS WITH LOCKING POINTS AT THE FOLLOWING LOCATIONS:

- HEAD – (1) LOCKING POINTS FOR PANEL WIDTHS <= 33",
  (2) LOCKING POINTS FOR PANEL WIDTHS > 33",
- SILL – (1) LOCKING POINTS FOR PANEL WIDTHS <= 20",
  (2) LOCKING POINTS FOR PANEL WIDTHS <= 35",
  (3) LOCKING POINTS FOR PANEL WIDTHS > 35"
- JAMBS – (2) LOCKING POINTS FOR PANEL HEIGHTS <= 41",
  (3) LOCKING POINTS FOR PANEL HEIGHTS <= 57",
  (4) LOCKING POINTS FOR PANEL HEIGHTS > 57",

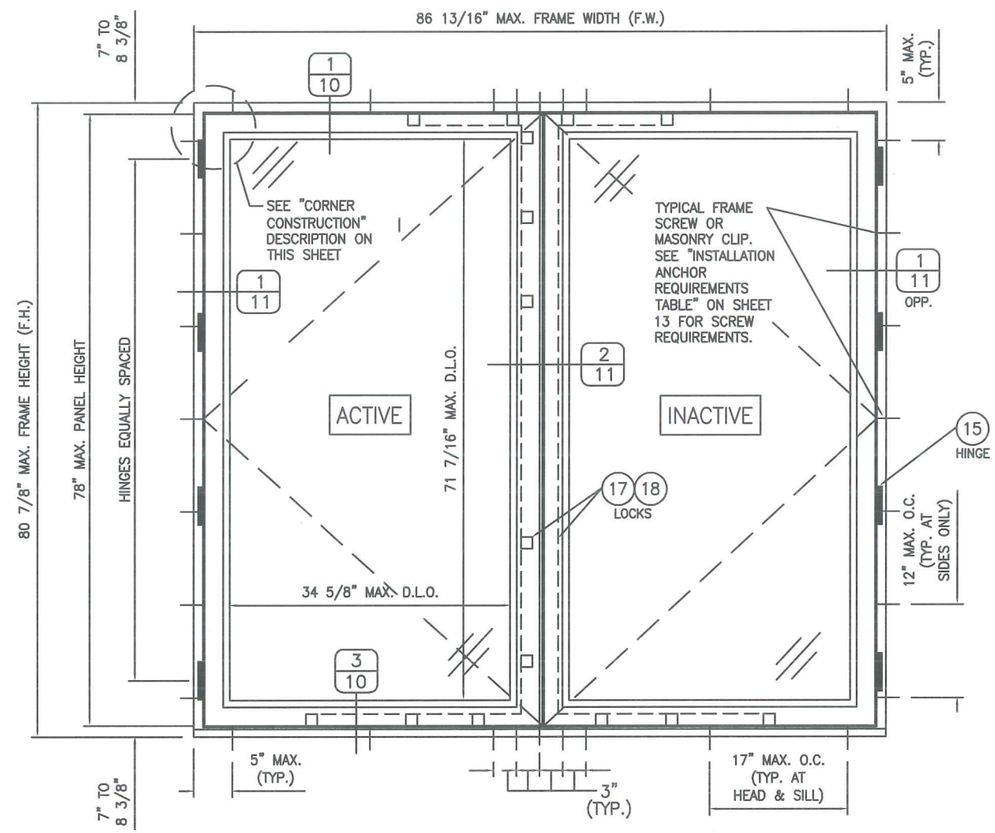

EXTERIOR ELEVATION
DOUBLE WINDOW UNIT

DATE: 2/26/14

NO.	REVISION DESCRIPTION	DATE
1	UPDATED TO 2014 FBC	6/15/15

12 FT WOOD SLIM EUROPEAN IMPACT OUTSWING CASEMENT WINDOWS

LÜXBAUM, LLC
WINDOWS + DOORS
2400 CENTREPARK WEST DR., SUITE 150
WEST PALM BEACH, FL 33409
Ph: (561) 684-1500
www.luxbaum.com

SCOTT WOLTERS LICENSED STATE OF FLORIDA PROFESSIONAL ENGINEER
SEAL
JAN 15 2015

SCOTT WOLTERS
FL PE# 62354

WOLTERS ENGINEERING
(COA# 27194)
15211 97TH ROAD N
WEST PALM BEACH, FL 33412

DRAWING NO.
CASEMENT WINDOW

SHEET NO.
1 OF 15

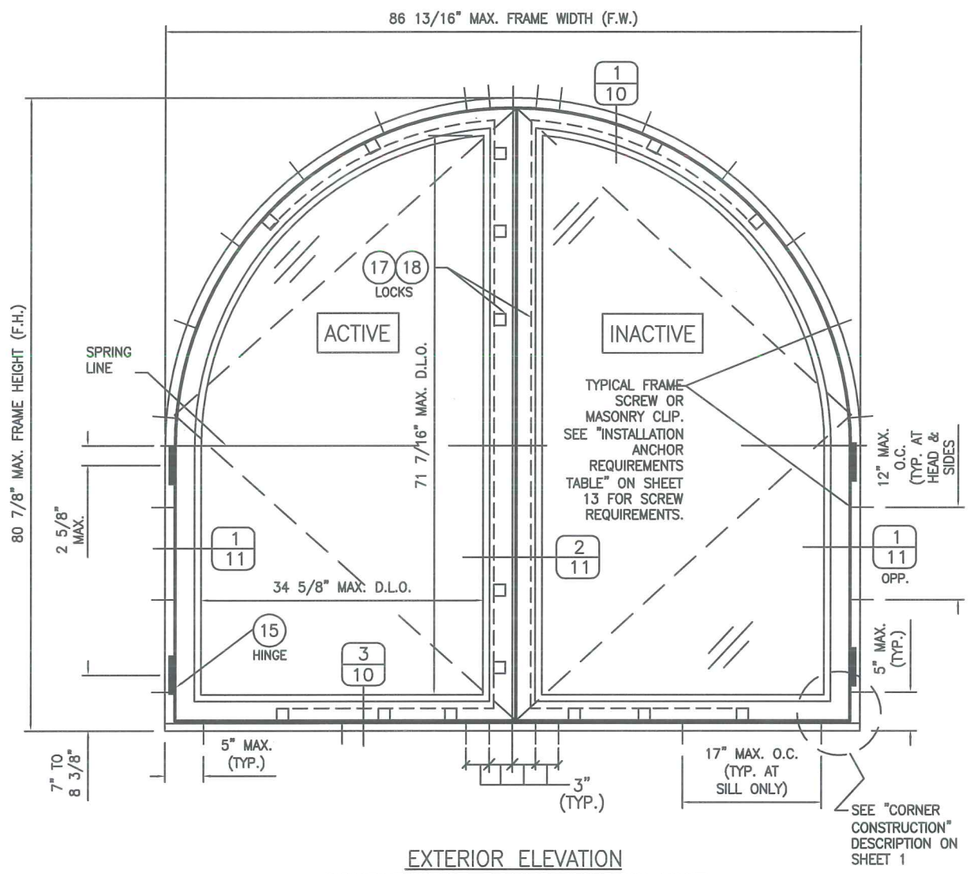

EXTERIOR ELEVATION
DOUBLE HALF ROUND WINDOW UNIT

(EYEBROW TOP WINDOWS SHALL ALSO APPLY PROVIDING CORNER CONSTRUCTION IS EQUAL TO THE RECTANGULAR UNIT)

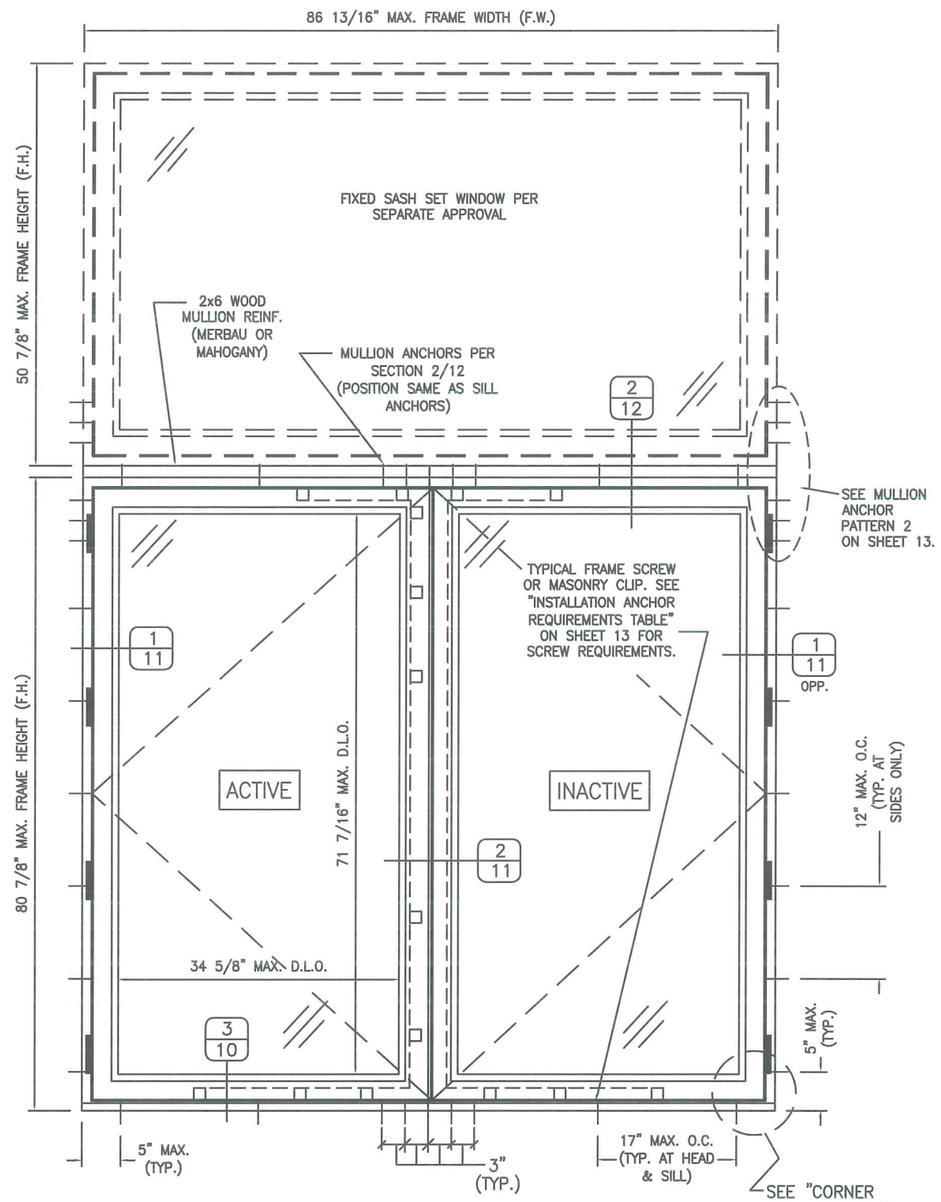

EXTERIOR ELEVATION
DOUBLE WINDOW UNIT WITH MULLED TRANSOM

SEE DOUBLE WINDOW ELEVATION FOR DETAIL NOT SHOWN

LIMITATIONS:

1. LOWER DESIGN PRESSURE (DP) FROM TRANSOM OR WINDOWS SHALL CONTROL FOR ENTIRE ASSEMBLY.
2. (4) OR (6) ANCHORS TO BE PROVIDED AT HORIZONTAL MULLION END. (SEE MULLION PATTERN 2 ON SHEET 13.)

HARDWARE NOTES (THIS SHEET):

HINGES: (#15) G-U HARDWARE 5020-SM LOCATED 8-3/8" (MAX) FROM CORNERS OR SPRINGLINE AND 27-3/8" O.C. (MAX), OR (#16) SIMONSWERK BAKA C2-20WF LOCATED 6" (MAX) FROM CORNERS OR SPRINGLINE AND 26-3/8" O.C. (MAX).

LOCKS: (#17) SIEGENIA NO. 3/45M5 OR (#18) G-U HWC-35 MULTI-POINT LOCKS WITH LOCKING POINTS AT THE FOLLOWING LOCATIONS:

HEAD – (1) LOCKING POINTS FOR PANEL WIDTHS <= 33",
(2) LOCKING POINTS FOR PANEL WIDTHS > 33",

SILL – (1) LOCKING POINTS FOR PANEL WIDTHS <= 20",
(2) LOCKING POINTS FOR PANEL WIDTHS <= 35",
(3) LOCKING POINTS FOR PANEL WIDTHS > 35"

JAMBS – (2) LOCKING POINTS FOR PANEL HEIGHTS <= 41",
(3) LOCKING POINTS FOR PANEL HEIGHTS <= 57",
(4) LOCKING POINTS FOR PANEL HEIGHTS > 57",

DATE: 2/26/14

NO.	REVISION DESCRIPTION	DATE
1	UPDATED TO 2014 FBC	6/15/15

12 FT WOOD SLIM EUROPEAN IMPACT OUTSWING CASEMENT WINDOWS

LÜXBAUM, LLC
WINDOWS + DOORS
2400 CENTREPARK WEST DR, SUITE 150
WEST PALM BEACH, FL 33409
Ph: (561) 684-1500
www.luxbaum.com

SCOTT WOLTERS LICENSE STATE OF FLORIDA PROFESSIONAL ENGINEER
JUN 15 2015

SCOTT WOLTERS
FL PE# 62354

WOLTERS ENGINEERING
(COA# 27194)
15211 97TH ROAD N
WEST PALM BEACH, FL 33412

DRAWING NO.
CASEMENT WINDOW

SHEET NO.
2 OF 15

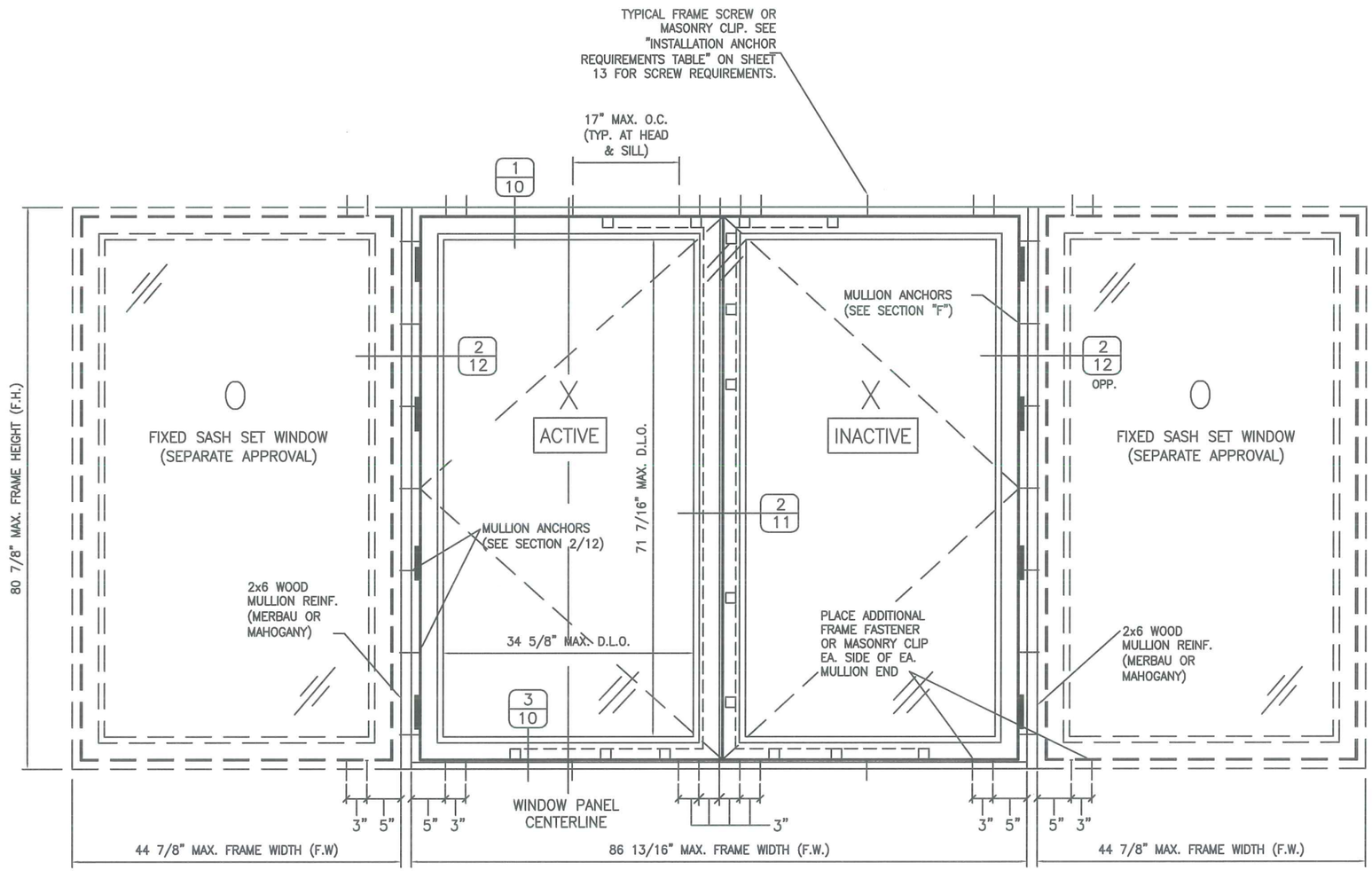

EXTERIOR ELEVATION
DOUBLE CASEMENT WINDOW UNIT WITH MULLED SIDE LIGHTS
(MAX. FOUR UNITS MAY BE COMBINED)

HARDWARE NOTES (THIS SHEET):

HINGES: (#15) G–U HARDWARE 5020–SM LOCATED 8–3/8" (MAX) FROM CORNERS OR SPRINGLINE AND 27–3/8" O.C. (MAX), OR (#16) SIMONSWERK BAKA C2–20WF LOCATED 6" (MAX) FROM CORNERS OR SPRINGLINE AND 26–3/8" O.C. (MAX).

LOCKS: (#17) SIEGENIA NO. 3/45M5 OR (#18) G–U HWC–35 MULTI–POINT LOCKS WITH LOCKING POINTS AT THE FOLLOWING LOCATIONS:

HEAD – (1) LOCKING POINTS FOR PANEL WIDTHS <= 33",
(2) LOCKING POINTS FOR PANEL WIDTHS > 33",

SILL – (1) LOCKING POINTS FOR PANEL WIDTHS <= 20",
(2) LOCKING POINTS FOR PANEL WIDTHS <= 35",
(3) LOCKING POINTS FOR PANEL WIDTHS > 35"

JAMBS – (2) LOCKING POINTS FOR PANEL HEIGHTS <= 41",
(3) LOCKING POINTS FOR PANEL HEIGHTS <= 57",
(4) LOCKING POINTS FOR PANEL HEIGHTS > 57",

NOTES:
1. LOWER DESIGN PRESSURE (DP) FROM CASEMENT OR FIXED WINDOWS SHALL CONTROL FOR ENTIRE ASSEMBLY.
2. (4) ANCHORS TO BE PROVIDED AT VERTICAL MULLION ENDS AS SHOWN.
3. SEE DOUBLE WINDOW ELEVATIONS FOR DETAIL NOT SHOWN.
4. O–XX–O UNIT SHOWN. TWO DOUBLE OPERABLE UNITS (I.E. XX–XX) MAY ALSO BE MULLED TOGETHER WITH THE MULLION CONDITIONS SHOWN.

DATE: 2/26/14

NO.	REVISION DESCRIPTION	DATE
1	UPDATED TO 2014 FBC	6/15/15

12 FT WOOD SLIM EUROPEAN IMPACT OUTSWING CASEMENT WINDOWS

LÜXBAUM, LLC
WINDOWS + DOORS
2400 CENTREPARK WEST DR, SUITE 150
WEST PALM BEACH, FL 33409
Ph: (561) 684-1500
www.luxbaum.com

SCOTT WOLTERS LICENSE STATE OF FLORIDA PROFESSIONAL ENGINEER
SEAL:

SCOTT WOLTERS
FL PE# 62354

WOLTERS ENGINEERING
(COA# 27194)
15211 97TH ROAD N
WEST PALM BEACH, FL 33412

DRAWING NO.
CASEMENT WINDOW

SHEET NO.
3 OF 15

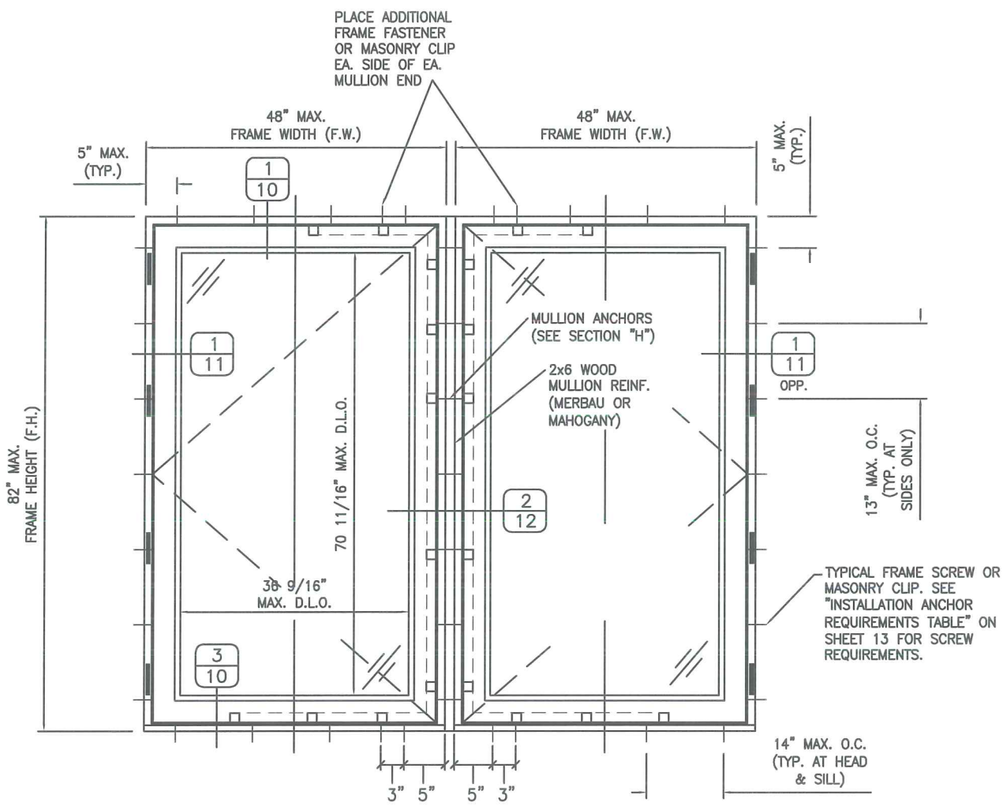

EXTERIOR ELEVATION
MULLED MULTIPLE OPERABLE CASEMENT WINDOW UNIT
(MAX. FOUR UNITS MAY BE COMBINED)

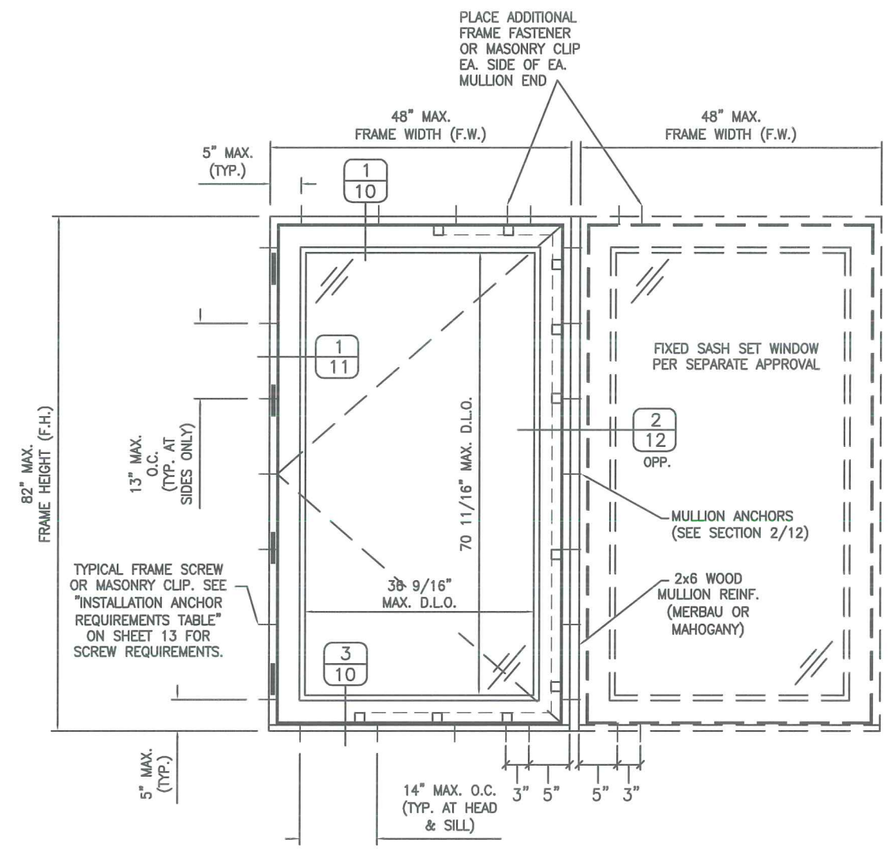

EXTERIOR ELEVATION
MULLED MULTIPLE OPERABLE/FIXED WINDOW UNIT
(MAX. FOUR UNITS MAY BE COMBINED WITH ANY COMBINATION OF FIXED & OPERABLE)

NOTES:
1. LOWER DESIGN PRESSURE (DP) FROM CASEMENT OR FIXED WINDOWS SHALL CONTROL FOR ENTIRE ASSEMBLY.
2. (4) ANCHORS TO BE PROVIDED AT VERTICAL MULLION ENDS AS SHOWN.
3. X–X AND X–O UNITS SHOWN. UP TO FOUR UNITS MAY BE MULLED TOGETHER WITH THE MULLION CONDITIONS SHOWN, IN ANY COMBINATION OF FIXED & OPERABLE.

HARDWARE NOTES (THIS SHEET):

HINGES: (#15) G–U HARDWARE 5020–SM LOCATED 8–3/8" (MAX) FROM CORNERS OR SPRINGLINE AND 27–3/8" O.C. (MAX), OR (#16) SIMONSWERK BAKA C2–20WF LOCATED 6" (MAX) FROM CORNERS OR SPRINGLINE AND 22–7/8" O.C. (MAX).

LOCKS: (#17) SIEGENIA NO. 3/50M5 OR (#18) G–U HWC–40 MULTI–POINT LOCKS WITH LOCKING POINTS AT THE FOLLOWING LOCATIONS:

HEAD – (1) LOCKING POINTS FOR PANEL WIDTHS <= 33",
(2) LOCKING POINTS FOR PANEL WIDTHS <= 42",
(3) LOCKING POINTS FOR PANEL WIDTHS > 42"

SILL – (1) LOCKING POINTS FOR PANEL WIDTHS <= 20",
(2) LOCKING POINTS FOR PANEL WIDTHS <= 35",
(3) LOCKING POINTS FOR PANEL WIDTHS > 35"

JAMBS – (2) LOCKING POINTS FOR PANEL HEIGHTS <= 41",
(3) LOCKING POINTS FOR PANEL HEIGHTS <= 57",
(4) LOCKING POINTS FOR PANEL HEIGHTS <= 77",
(5) LOCKING POINTS FOR PANEL HEIGHTS > 77"

DATE: 2/26/14

NO.	REVISION DESCRIPTION	DATE
1	UPDATED TO 2014 FBC	6/15/15

12 FT WOOD SLIM EUROPEAN IMPACT OUTSWING CASEMENT WINDOWS

LÜXBAUM ,LLC
WINDOWS + DOORS
2400 CENTREPARK WEST DR, SUITE 150
WEST PALM BEACH, FL 33409
Ph: (561) 684-1500
www.luxbaum.com

SCOTT WOLTERS LICENSE STATE OF PROFESSIONAL ENGINEER
SEAL
JUN 15 2015

SCOTT WOLTERS
FL PE# 62354

WOLTERS ENGINEERING
(COA# 27194)
15211 97TH ROAD N
WEST PALM BEACH, FL 33412

DRAWING NO.
CASEMENT WINDOW

SHEET NO.
4 OF 15

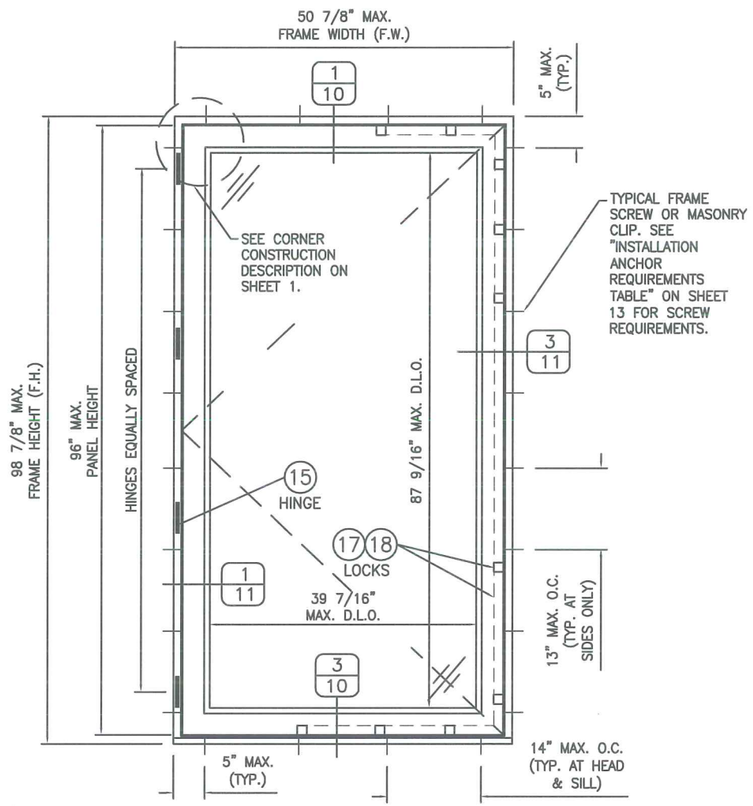

EXTERIOR ELEVATION
SINGLE WINDOW UNIT

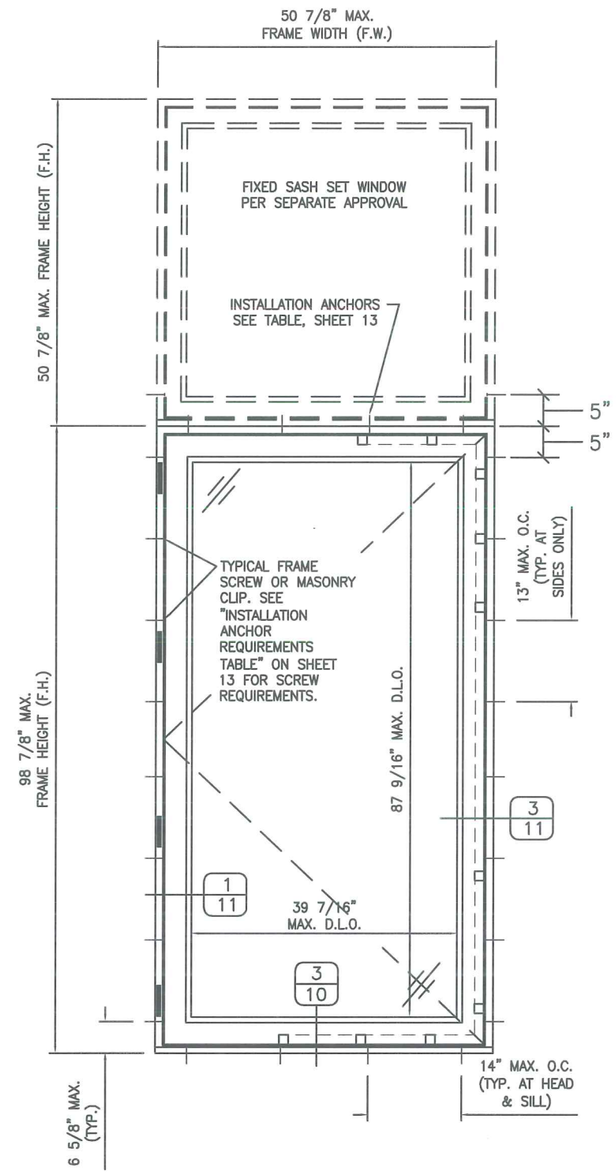

EXTERIOR ELEVATION
CASEMENT WINDOW WITH DIRECT–STACK TRANSOM
SEE SINGLE WINDOW ELEVATION FOR DETAIL NOT SHOWN

NOTES:
1. LOWER DESIGN PRESSURE (DP) FROM TRANSOM OR WINDOWS SHALL CONTROL FOR ENTIRE ASSEMBLY.
2. (4) OR (6) ANCHORS TO BE PROVIDED AT HORIZONTAL MULLION END. (SEE MULLION PATTERN 2 ON SHEET 13.)

HARDWARE NOTES (THIS SHEET):

HINGES: (#15) G–U HARDWARE 5020–SM LOCATED 8–3/8" (MAX) FROM CORNERS OR SPRINGLINE AND 27–3/8" O.C. (MAX), OR (#16) SIMONSWERK BAKA C2–20WF LOCATED 6" (MAX) FROM CORNERS OR SPRINGLINE AND 22–7/8" O.C. (MAX).

LOCKS: (#17) SIEGENIA NO. 3/50M5 OR (#18) G–U HWC–40 MULTI–POINT LOCKS WITH LOCKING POINTS AT THE FOLLOWING LOCATIONS:

HEAD – (1) LOCKING POINTS FOR PANEL WIDTHS <= 33",
(2) LOCKING POINTS FOR PANEL WIDTHS <= 42",
(3) LOCKING POINTS FOR PANEL WIDTHS > 42"

SILL – (1) LOCKING POINTS FOR PANEL WIDTHS <= 20",
(2) LOCKING POINTS FOR PANEL WIDTHS <= 35",
(3) LOCKING POINTS FOR PANEL WIDTHS > 35"

JAMBS – (2) LOCKING POINTS FOR PANEL HEIGHTS <= 41",
(3) LOCKING POINTS FOR PANEL HEIGHTS <= 57",
(4) LOCKING POINTS FOR PANEL HEIGHTS <= 77",
(5) LOCKING POINTS FOR PANEL HEIGHTS > 77"

DATE: 2/26/14

NO.	REVISION DESCRIPTION	DATE
1	UPDATED TO 2014 FBC	6/15/15

12 FT WOOD SLIM EUROPEAN IMPACT OUTSWING CASEMENT WINDOWS

LÜXBAUM ,LLC
WINDOWS + DOORS
2400 CENTREPARK WEST DR, SUITE 150
WEST PALM BEACH, FL 33409
Ph: (561) 684-1500
www.luxbaum.com

SCOTT WOLTERS LICENSE No. 62354 STATE OF FLORIDA PROFESSIONAL ENGINEER
SEAL
JUN 15 2015

SCOTT WOLTERS
FL PE# 62354

WOLTERS ENGINEERING
(COA# 27194)
15211 97TH ROAD N
WEST PALM BEACH, FL 33412

DRAWING NO.
CASEMENT WINDOW

SHEET NO.
5 OF 15

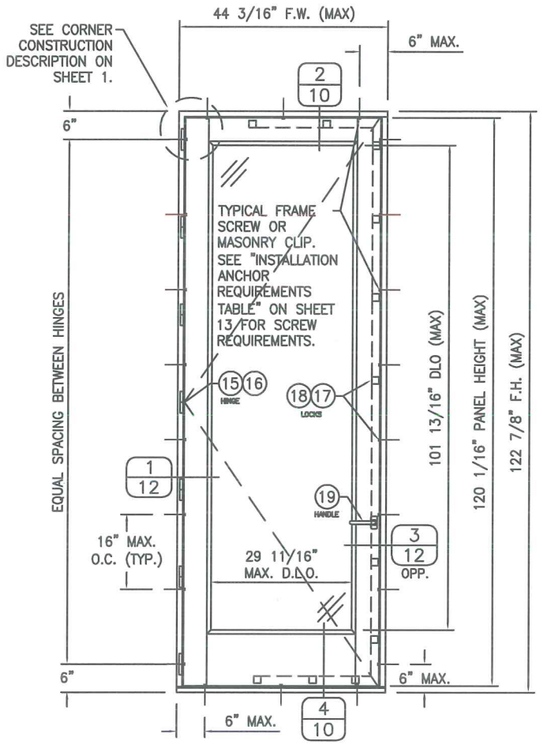

EXTERIOR ELEVATION
SINGLE OUTSWING WINDOW
(RECTANGULAR)

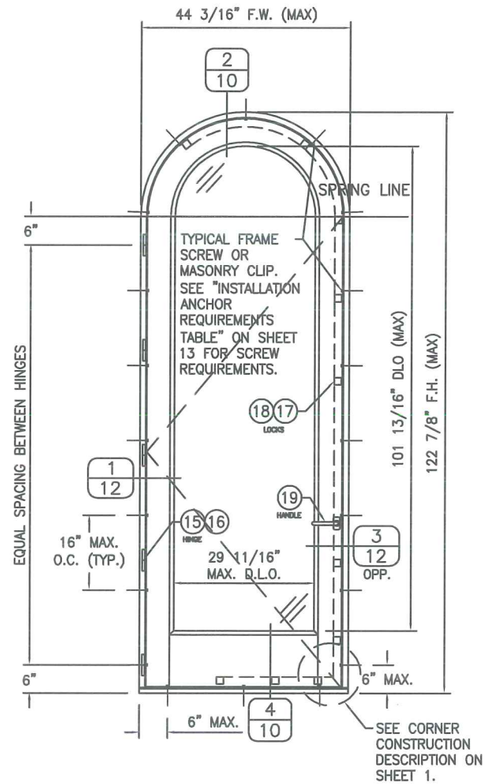

EXTERIOR ELEVATION
SINGLE OUTSWING WINDOW
(CIRCLE TOP)

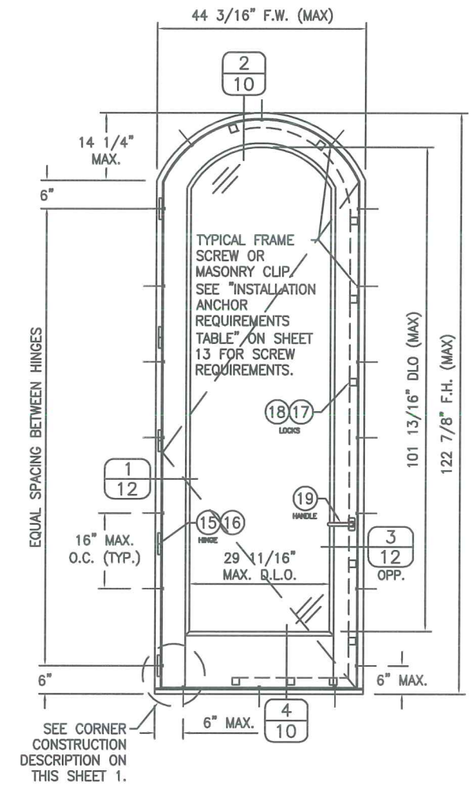

EXTERIOR ELEVATION
SINGLE OUTSWING WINDOW
(ARCH TOP)

HARDWARE NOTES (THIS SHEET):

HINGES: (#15) G–U HARDWARE 5020–SM OR (#16) SIMONSWERK BAKA C2–20WF, LOCATED 6" (MAX) FROM CORNERS OR SPRINGLINE AND 26.4" O.C. (MAX).

LOCKS: (#17) SIEGENIA NO. 3/45M5 OR (#18) G–U HWC–35 MULTI–POINT LOCKS WITH LOCKING POINTS AT THE FOLLOWING LOCATIONS:

HEAD – (1) LOCKING POINTS FOR PANEL WIDTHS < 20",
(2) LOCKING POINTS FOR PANEL WIDTHS >= 20",

SILL – (1) LOCKING POINTS FOR PANEL WIDTHS < 20",
(3) LOCKING POINTS FOR PANEL WIDTHS >= 20"

JAMBS – (5) LOCKING POINTS FOR PANEL HEIGHTS < 96",
(6) LOCKING POINTS FOR PANEL HEIGHTS < 108",
(7) LOCKING POINTS FOR PANEL HEIGHTS < 126",
(8) LOCKING POINTS FOR PANEL HEIGHTS >= 126"

DATE: 2/26/14

NO.	REVISION DESCRIPTION	DATE
1	UPDATED TO 2014 FBC	6/15/15

12 FT WOOD SLIM EUROPEAN IMPACT OUTSWING CASEMENT WINDOWS

LÜXBAUM, LLC
WINDOWS + DOORS
2400 CENTREPARK WEST DR, SUITE 150
WEST PALM BEACH, FL 33409
Ph: (561) 684-1500
www.luxbaum.com

SEAL:
SCOTT WOLTERS LICENSE
STATE OF FLORIDA
PROFESSIONAL ENGINEER
OCT 15 2015

SCOTT WOLTERS
FL PE# 62354

WOLTERS ENGINEERING
(COA# 27194)
15211 97TH ROAD N
WEST PALM BEACH, FL 33412

DRAWING NO.
CASEMENT WINDOW

SHEET NO.
6 OF 15

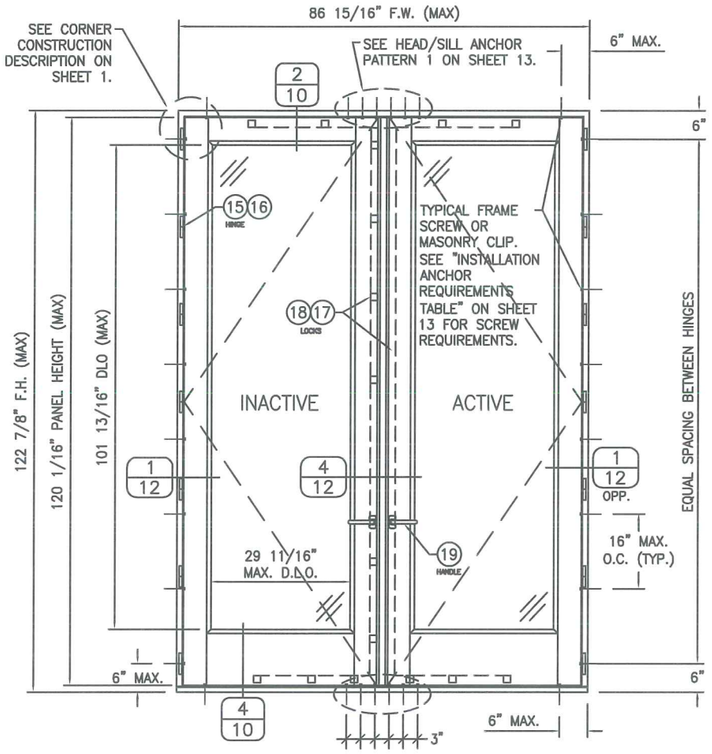

EXTERIOR ELEVATION
DOUBLE OUTSWING WINDOW
(RECTANGULAR)

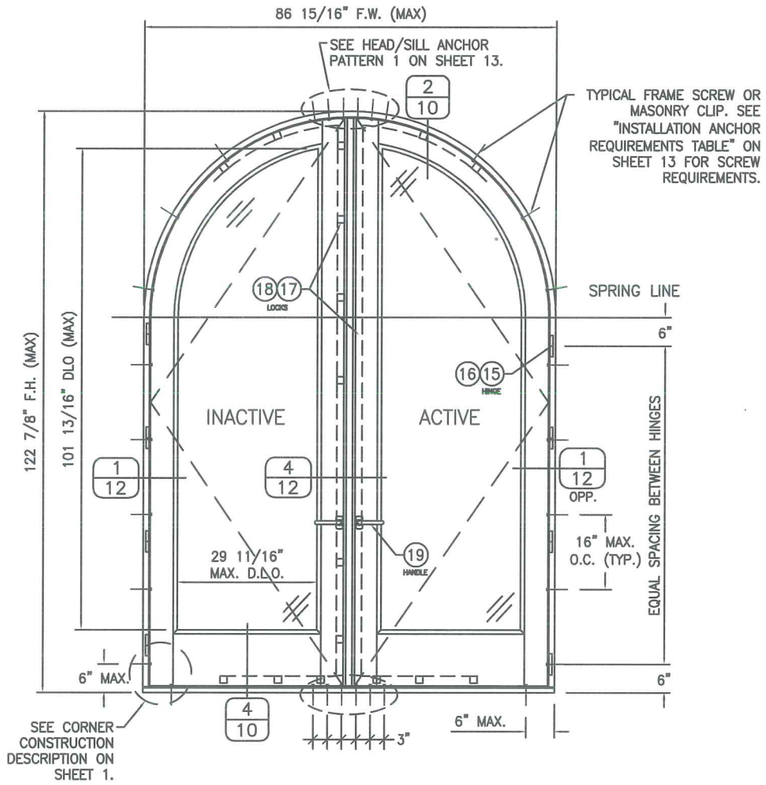

EXTERIOR ELEVATION
DOUBLE OUTSWING WINDOW
(CIRCLE TOP)

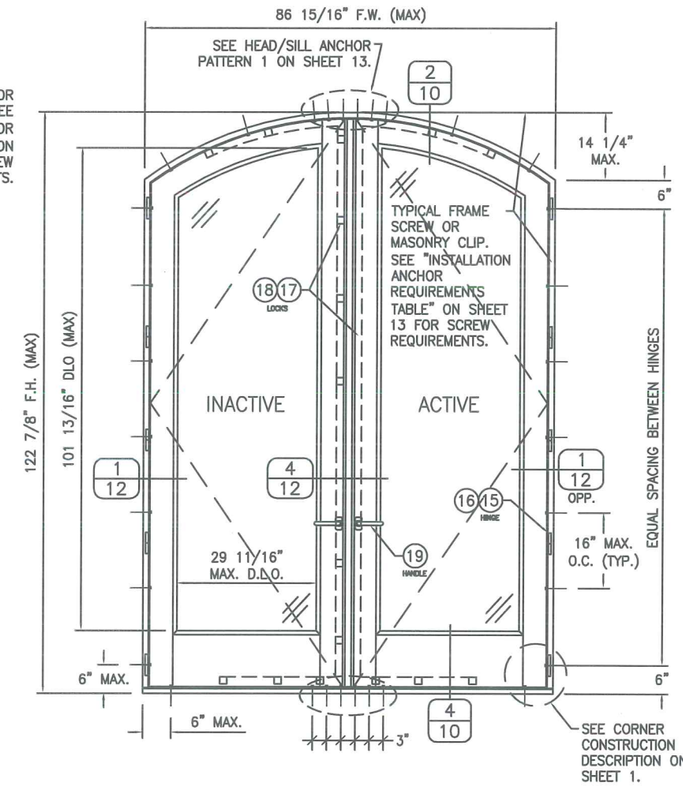

EXTERIOR ELEVATION
DOUBLE OUTSWING WINDOW
(ARCH TOP)

HARDWARE NOTES (THIS SHEET):

HINGES: (#15) G-U HARDWARE 5020-SM OR (#16) SIMONSWERK BAKA C2-20WF, LOCATED 6" (MAX) FROM CORNERS OR SPRINGLINE AND 26.4" O.C. (MAX).

LOCKS: (#17) SIEGENIA NO. 3/45M5 OR (#18) G-U HWC-35 MULTI-POINT LOCKS WITH LOCKING POINTS AT THE FOLLOWING LOCATIONS:

- HEAD – (1) LOCKING POINTS FOR PANEL WIDTHS < 20",
  (2) LOCKING POINTS FOR PANEL WIDTHS >= 20",
- SILL – (1) LOCKING POINTS FOR PANEL WIDTHS < 20",
  (3) LOCKING POINTS FOR PANEL WIDTHS >= 20"
- JAMBS – (5) LOCKING POINTS FOR PANEL HEIGHTS < 96",
  (6) LOCKING POINTS FOR PANEL HEIGHTS < 108",
  (7) LOCKING POINTS FOR PANEL HEIGHTS < 126",
  (8) LOCKING POINTS FOR PANEL HEIGHTS >= 126"

DATE: 2/26/14

NO.	REVISION DESCRIPTION	DATE
1	UPDATED TO 2014 FBC	6/15/15

12 FT WOOD SLIM EUROPEAN IMPACT OUTSWING CASEMENT WINDOWS

LÜXBAUM, LLC
WINDOWS + DOORS
2400 CENTREPARK WEST DR, SUITE 150
WEST PALM BEACH, FL 33409
Ph: (561) 684-1500
www.luxbaum.com

SCOTT WOLTERS LICENSE 62354 STATE OF FLORIDA PROFESSIONAL ENGINEER
SEAL:
JUN 5 2015

SCOTT WOLTERS
FL PE# 62354

WOLTERS ENGINEERING
(COA# 27194)
15211 97TH ROAD N
WEST PALM BEACH, FL 33412

DRAWING NO.
CASEMENT WINDOW

SHEET NO.
7 OF 15

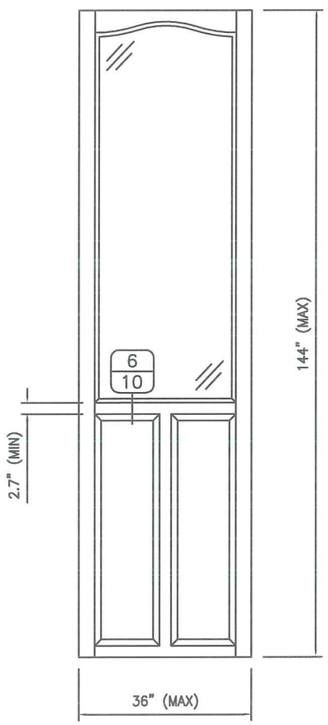

EXTERIOR ELEVATION
PARTIAL RAISED PANEL WITH
STANDARD MID–RAILS

NOTES:

1. TOP & MID RAILS MAY BE OF ANY CONFIGURATION PROVIDING THE SMALLEST CROSS SECTION OF RAILS IS EQUAL TO OR LARGER THAN THAT DETAILED IN DRAWINGS.
2. MULTIPLE MID RAIL (BOTH HORIZONTAL & VERTICAL) MAY BE USED WITH THESE PANELS.
3. STANDARD PARTIAL PANEL CONDITION IS SHOWN ABOVE. OTHER PARTIAL PANEL CONFIGURATIONS ARE ALSO PART OF THIS APPROVAL, PROVIDING THEY ARE SIMILAR IN CONSTRUCTION TO THAT SHOWN ABOVE.
4. PANEL ONLY IS SHOWN. FOR INSTALLATION INTO FRAME, SEE OTHER ELEVATIONS.

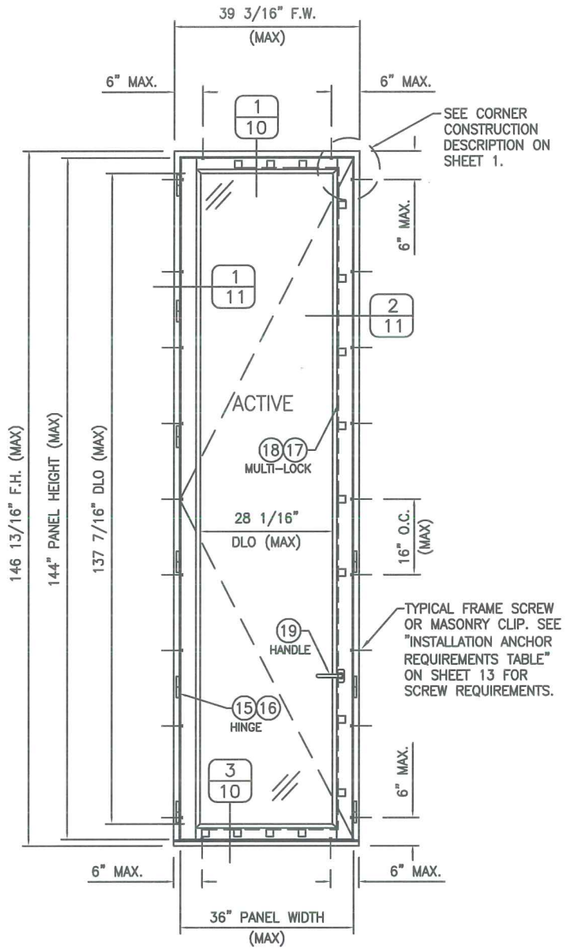

EXTERIOR ELEVATION
SINGLE RECTANGULAR WINDOW

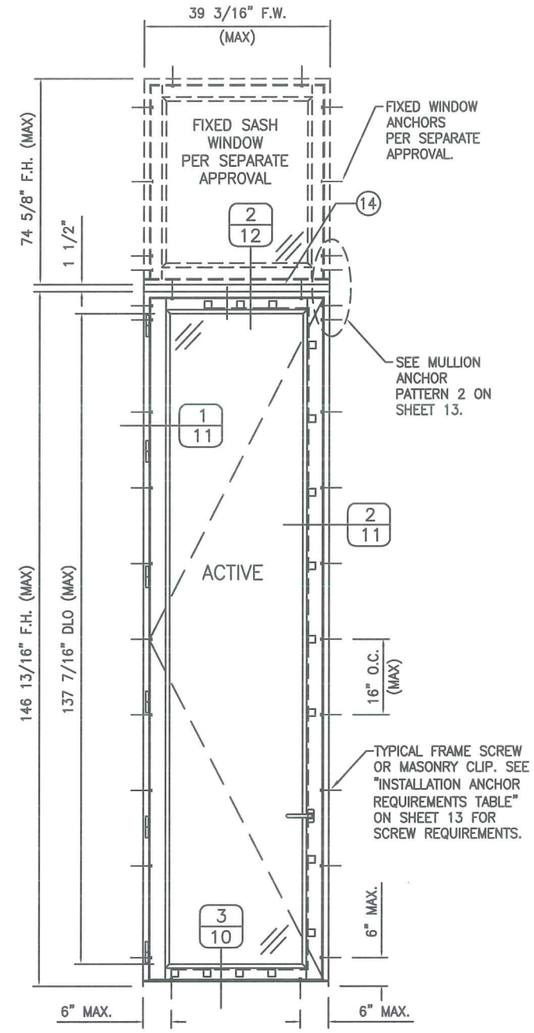

EXTERIOR ELEVATION
SINGLE WINDOW WITH TRANSOM

NOTES:

1. LOWER DESIGN PRESSURE (DP) FROM TRANSOM OR WINDOWS SHALL CONTROL FOR ENTIRE ASSEMBLY.
2. (4) OR (6) ANCHORS TO BE PROVIDED AT HORIZONTAL MULLION END. (SEE MULLION PATTERN 2 ON SHEET 13.)

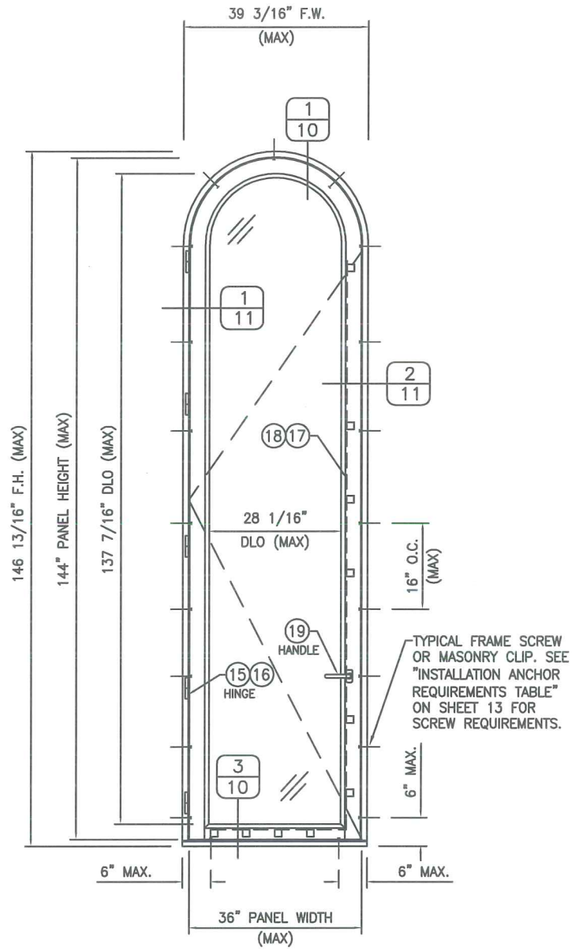

EXTERIOR ELEVATION
SINGLE HALF ROUND WINDOW

HARDWARE NOTES (THIS SHEET):

HINGES: (#15) G–U HARDWARE 5020–SM OR (#16) SIMONSWERK BAKA C2–20WF, LOCATED 6" (MAX) FROM CORNERS OR SPRINGLINE AND 26.4" O.C. (MAX).

LOCKS: (#17) SIEGENIA NO. 3/45M5 OR (#18) G–U HWC–35 MULTI–POINT LOCKS WITH LOCKING POINTS AT THE FOLLOWING LOCATIONS:

HEAD – (1) LOCKING POINTS FOR PANEL WIDTHS < 20",
(3) LOCKING POINTS FOR PANEL WIDTHS >= 20",
SILL – (1) LOCKING POINTS FOR PANEL WIDTHS < 20",
(4) LOCKING POINTS FOR PANEL WIDTHS >= 20"
JAMBS – (5) LOCKING POINTS FOR PANEL HEIGHTS < 96",
(6) LOCKING POINTS FOR PANEL HEIGHTS < 108",
(7) LOCKING POINTS FOR PANEL HEIGHTS < 126",
(8) LOCKING POINTS FOR PANEL HEIGHTS >= 126"

DATE: 2/26/14

NO.	REVISION DESCRIPTION	DATE
1	UPDATED TO 2014 FBC	6/15/15

12 FT WOOD SLIM EUROPEAN IMPACT OUTSWING CASEMENT WINDOWS

LÜXBAUM, LLC
WINDOWS + DOORS
2400 CENTREPARK WEST DR, SUITE 150
WEST PALM BEACH, FL 33409
Ph: (561) 684-1500
www.luxbaum.com

SEAL: SCOTT WOLTERS LICENSED PROFESSIONAL ENGINEER No. 62354 STATE OF FLORIDA JUN 15 2015

SCOTT WOLTERS
FL PE# 62354

WOLTERS ENGINEERING
(COA# 27194)
15211 97TH ROAD N
WEST PALM BEACH, FL 33412

DRAWING NO.
CASEMENT WINDOW

SHEET NO.
8 OF 15

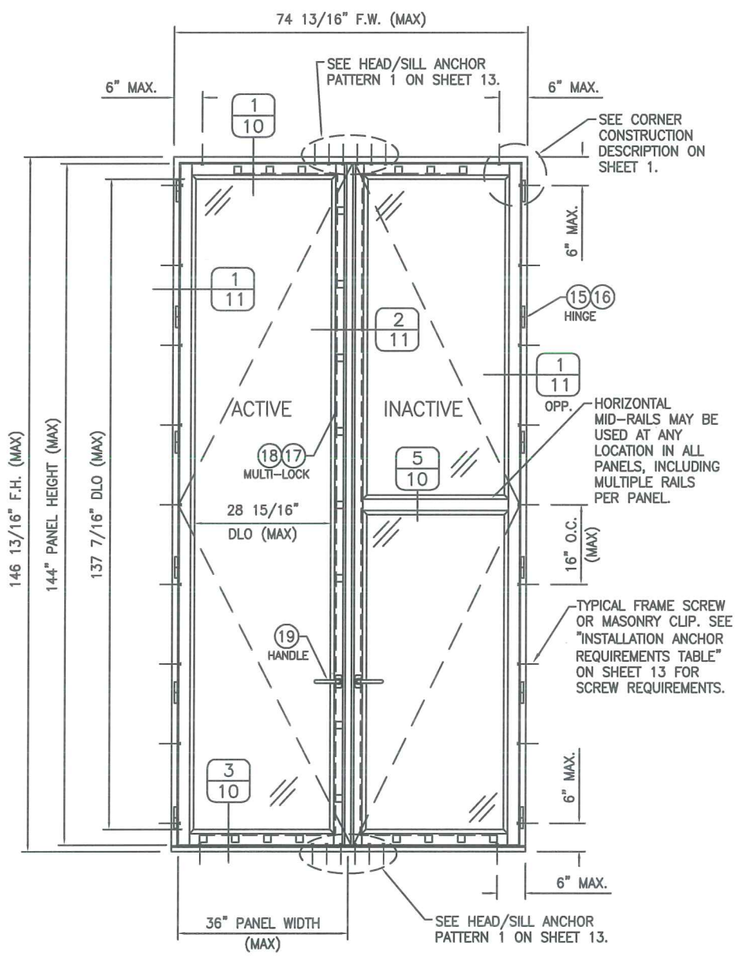

EXTERIOR ELEVATION
DOUBLE RECTANGULAR WINDOW

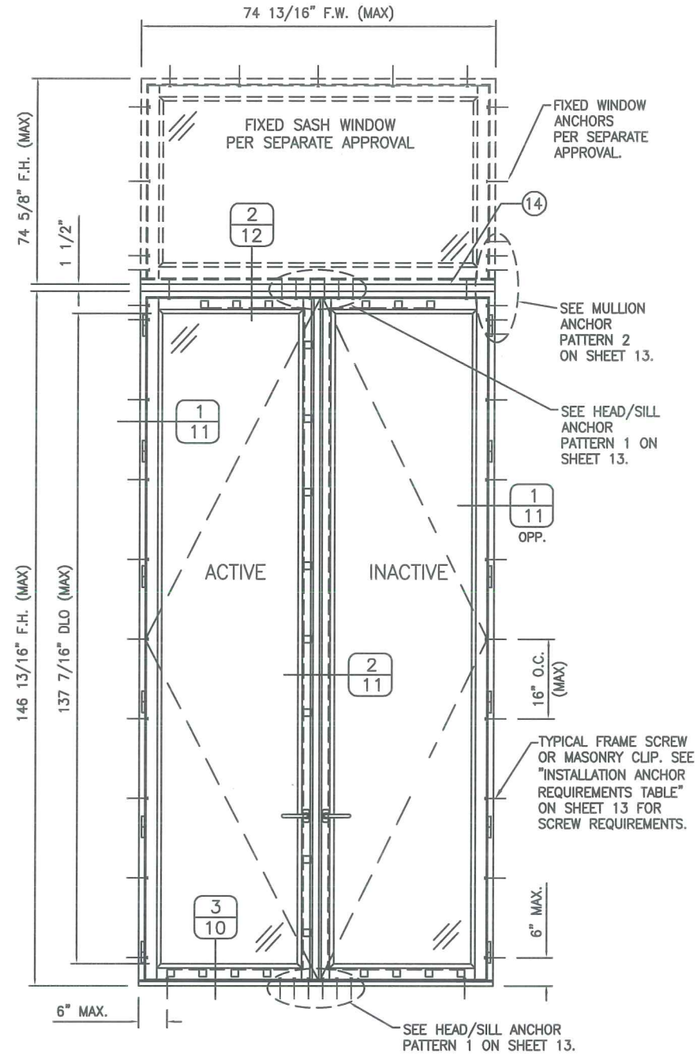

EXTERIOR ELEVATION
DOUBLE WINDOW WITH MULLED TRANSOM

NOTES:
1. LOWER DESIGN PRESSURE (DP) FROM TRANSOM OR WINDOWS SHALL CONTROL FOR ENTIRE ASSEMBLY.
2. (4) OR (6) ANCHORS TO BE PROVIDED AT HORIZONTAL MULLION END. (SEE MULLION PATTERN 2 ON SHEET 13.)

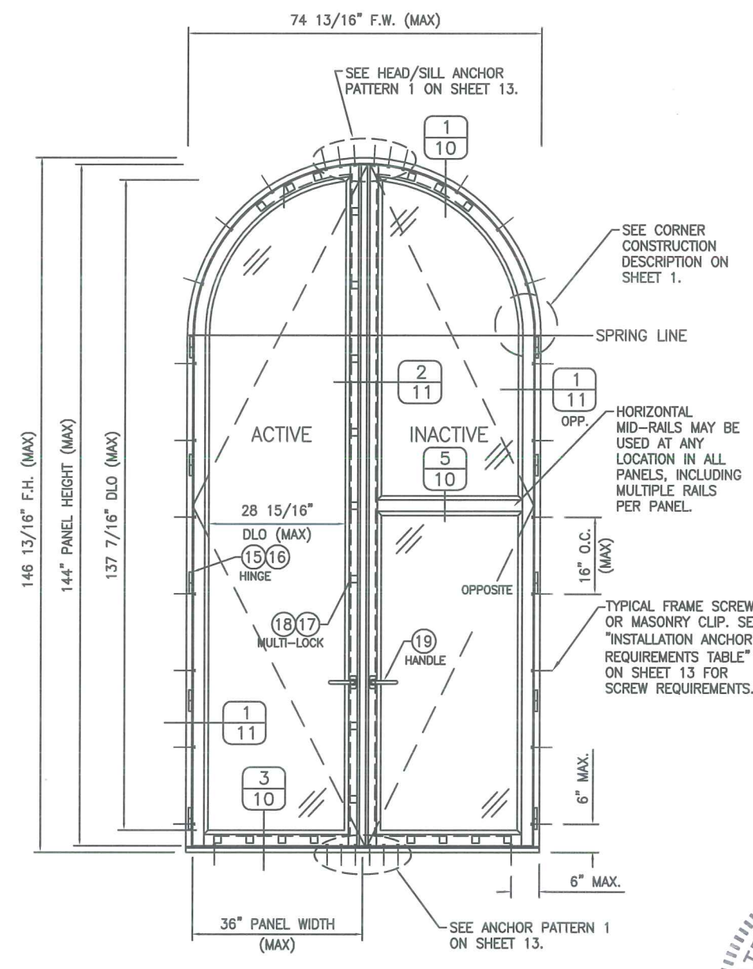

EXTERIOR ELEVATION
DOUBLE HALF ROUND WINDOW

HARDWARE NOTES (THIS SHEET):

HINGES: (#15) G-U HARDWARE 5020-SM OR (#16) SIMONSWERK BAKA C2-20WF, LOCATED 6" (MAX) FROM CORNERS OR SPRINGLINE AND 26.4" O.C. (MAX).

LOCKS: (#17) SIEGENIA NO. 3/45M5 OR (#18) G-U HWC-35 MULTI-POINT LOCKS WITH LOCKING POINTS AT THE FOLLOWING LOCATIONS:

HEAD – (1) LOCKING POINTS FOR PANEL WIDTHS < 20",
(3) LOCKING POINTS FOR PANEL WIDTHS >= 20",
SILL – (1) LOCKING POINTS FOR PANEL WIDTHS < 20",
(4) LOCKING POINTS FOR PANEL WIDTHS >= 20"
JAMBS – (5) LOCKING POINTS FOR PANEL HEIGHTS < 96",
(6) LOCKING POINTS FOR PANEL HEIGHTS < 108",
(7) LOCKING POINTS FOR PANEL HEIGHTS < 126",
(8) LOCKING POINTS FOR PANEL HEIGHTS >= 126"

DATE: 2/26/14

NO.	REVISION DESCRIPTION	DATE
1	UPDATED TO 2014 FBC	6/15/15

12 FT WOOD SLIM EUROPEAN IMPACT OUTSWING CASEMENT WINDOWS

LÜXBAUM, LLC
WINDOWS + DOORS
2400 CENTREPARK WEST DR, SUITE 150
WEST PALM BEACH, FL 33409
Ph: (561) 684-1500
www.luxbaum.com

SEAL: SCOTT WOLTERS LICENSE No. 62354 STATE OF FLORIDA PROFESSIONAL ENGINEER JUN 15 2015

SCOTT WOLTERS
FL PE# 62354

WOLTERS ENGINEERING
(COA# 27194)
15211 97TH ROAD N
WEST PALM BEACH, FL 33412

DRAWING NO.
CASEMENT WINDOW

SHEET NO.
9 OF 15

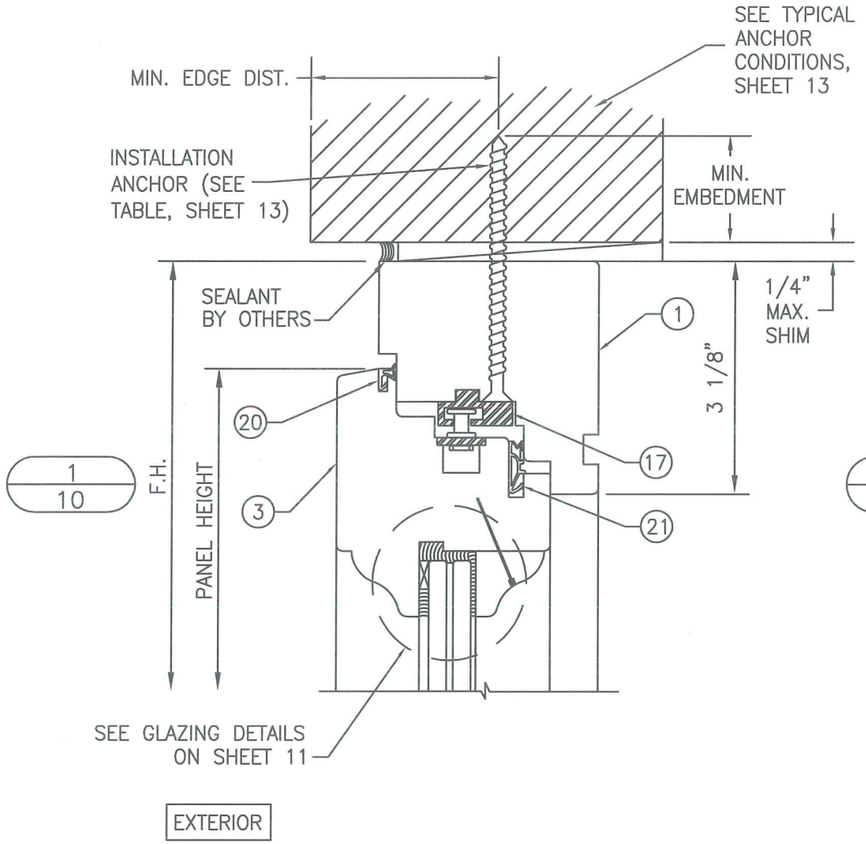

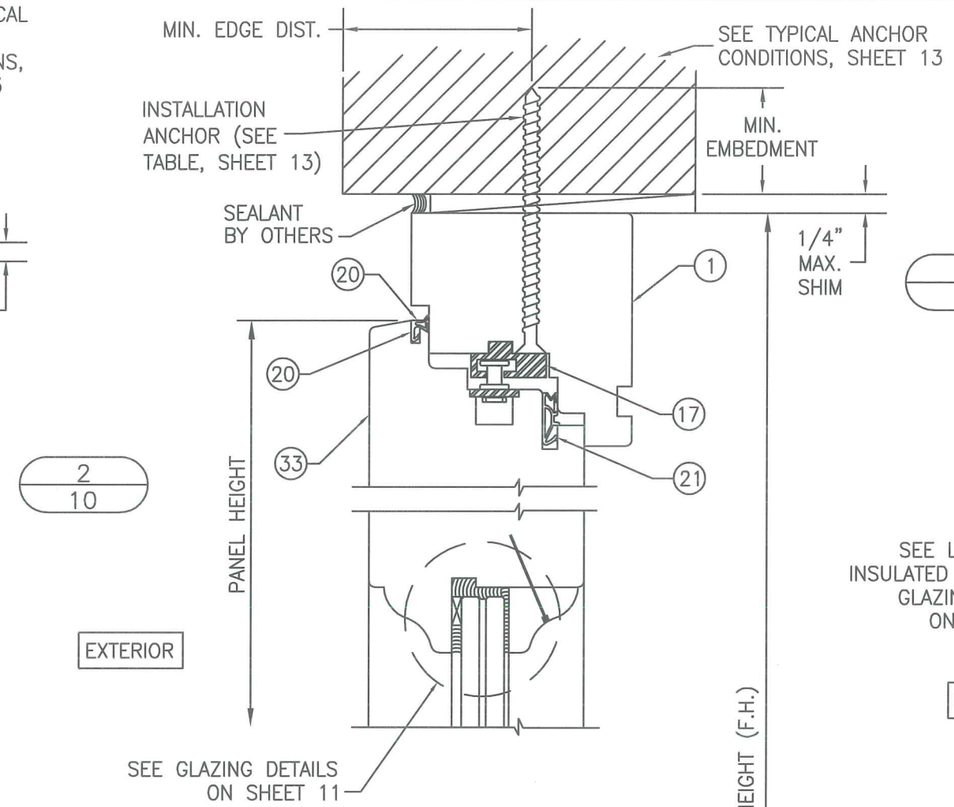

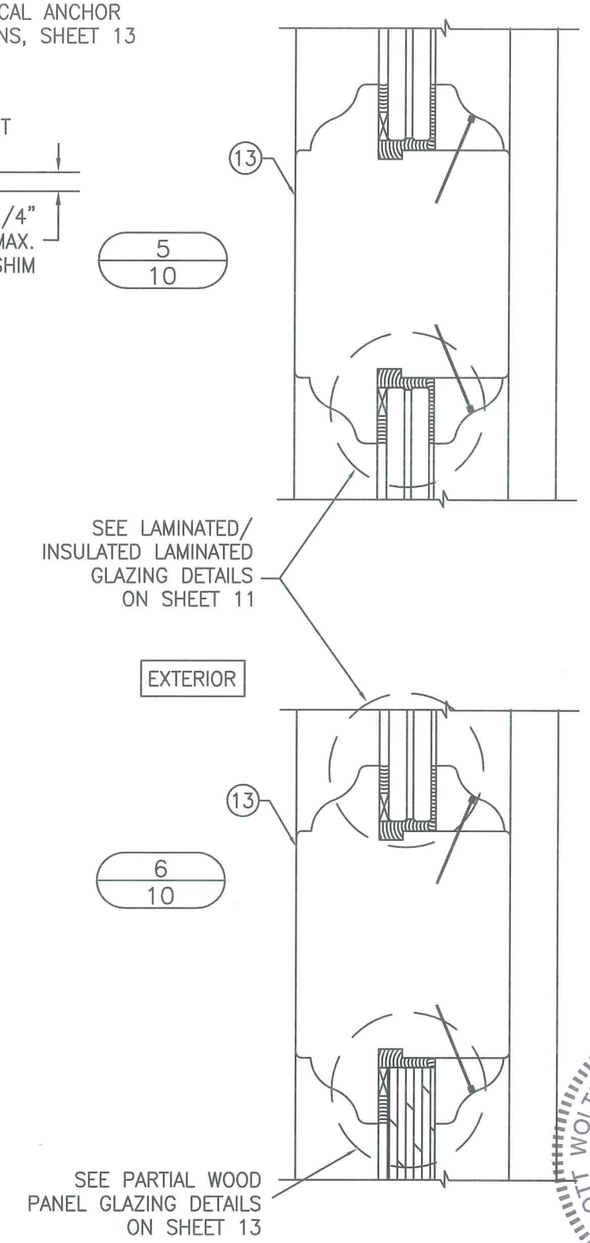

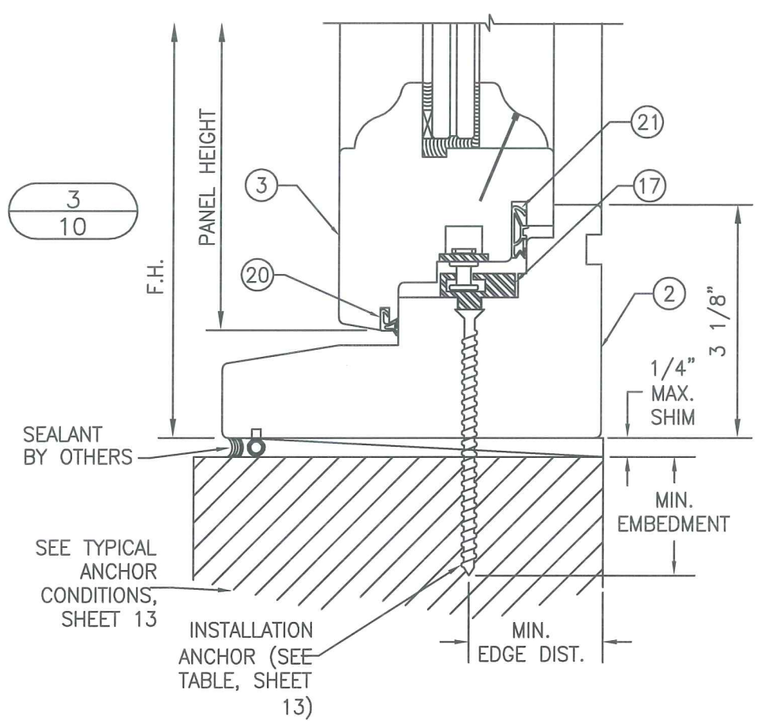

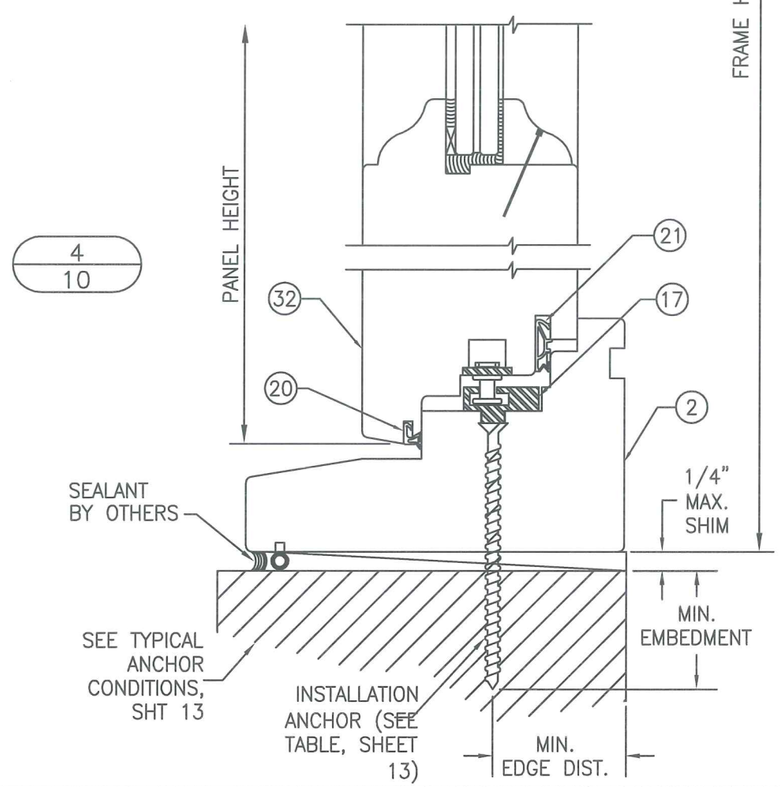

DATE: 2/26/14

NO.	REVISION DESCRIPTION	DATE
1	UPDATED TO 2014 FBC	6/15/15

12 FT EUROPEAN WOOD IMPACT OUTSWING CASEMENT WINDOWS

LÜXBAUM ,LLC
WINDOWS + DOORS
2400 CENTREPARK WEST DR, SUITE 150
WEST PALM BEACH, FL 33409
Ph: (561) 684-1500
www.luxbaum.com

SCOTT WOLTERS LICENSE SEAL STATE OF FLORIDA PROFESSIONAL ENGINEER

SCOTT WOLTERS
FL PE# 62354
WOLTERS ENGINEERING
(COA# 27194)
15211 97TH ROAD N
WEST PALM BEACH, FL 33412

DRAWING NO.
CASEMENT WINDOW

SHEET NO.
10 OF 15

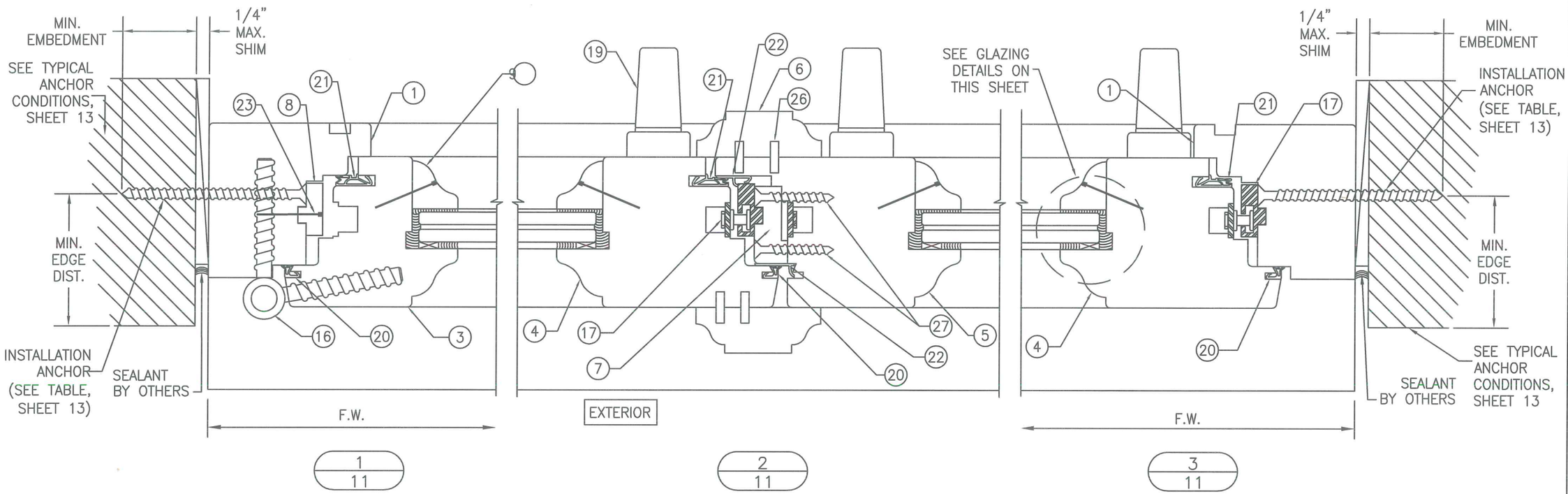

GLAZING DETAILS

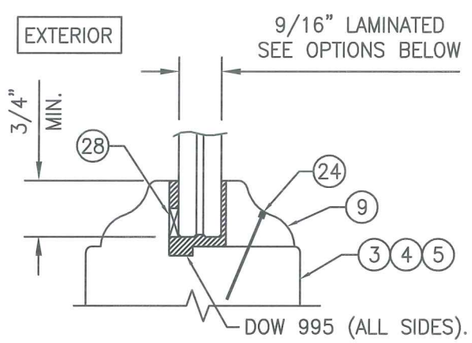

9/16" GLAZING DETAIL

OPTION 1: 9/16" SAF–GLAS LAMINATED GLASS (1/4" A.N./0.015" ADHESIVE/0.07" POLYCARBONATE/0.015" ADHESIVE/1/4" A.N.)

OPTION 2: 9/16" SAF–GLAS LAMINATED GLASS (1/4" HT.ST./0.015" ADHESIVE/0.07" POLYCARBONATE/0.015" ADHESIVE/1/4" HT.ST.)

OPTION 3: 9/16" DUPONT SENTRYGLAS IONOPLAST LAMINATED GLASS (1/4" A.N./0.090" SGP/1/4" A.N.)

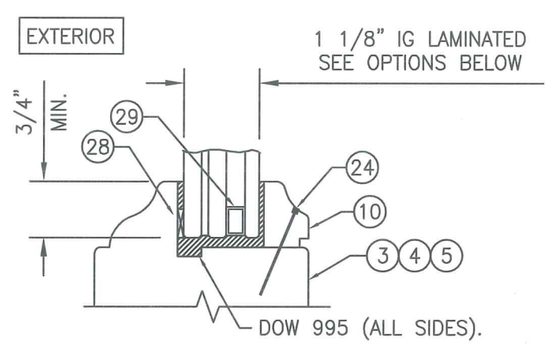

I.G. GLAZING DETAIL

OPTION 4: 1 1/8" I.G. LAMINATED GLASS (3/16" H.S./0.090" SGP/3/16" H.S. EXTERIOR – 1/2" AIR SPACE – 3/16" TEMPERED INTERIOR)

OPTION 5: 1" I.G. LAMINATED GLASS (1/4" A.N./0.090" SGP/1/4" A.N. EXTERIOR – 1/4" SPACE – 3/16" TEMPERED INTERIOR)

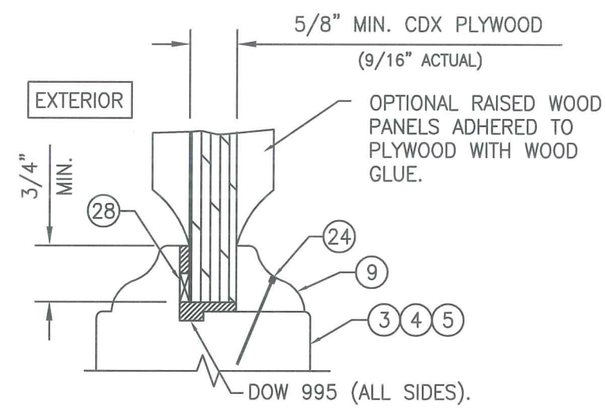

PARTIAL WOOD PANEL DETAIL

NO.	REVISION DESCRIPTION	DATE
1	UPDATED TO 2014 FBC	6/15/15

DATE: 2/26/14

12 FT EUROPEAN WOOD IMPACT OUTSWING CASEMENT WINDOWS

LÜXBAUM, LLC
WINDOWS + DOORS
2400 CENTREPARK WEST DR, SUITE 150
WEST PALM BEACH, FL 33409
Ph: (561) 684-1500
www.luxbaum.com

SCOTT WOLTERS LICENSE STATE OF FLORIDA PROFESSIONAL ENGINEER
SEAL
JUN 15 2015

SCOTT WOLTERS
FL PE# 62354

WOLTERS ENGINEERING
(COA# 27194)
15211 97TH ROAD N
WEST PALM BEACH, FL 33412

DRAWING NO.
CASEMENT WINDOW

SHEET NO.
11 OF 15

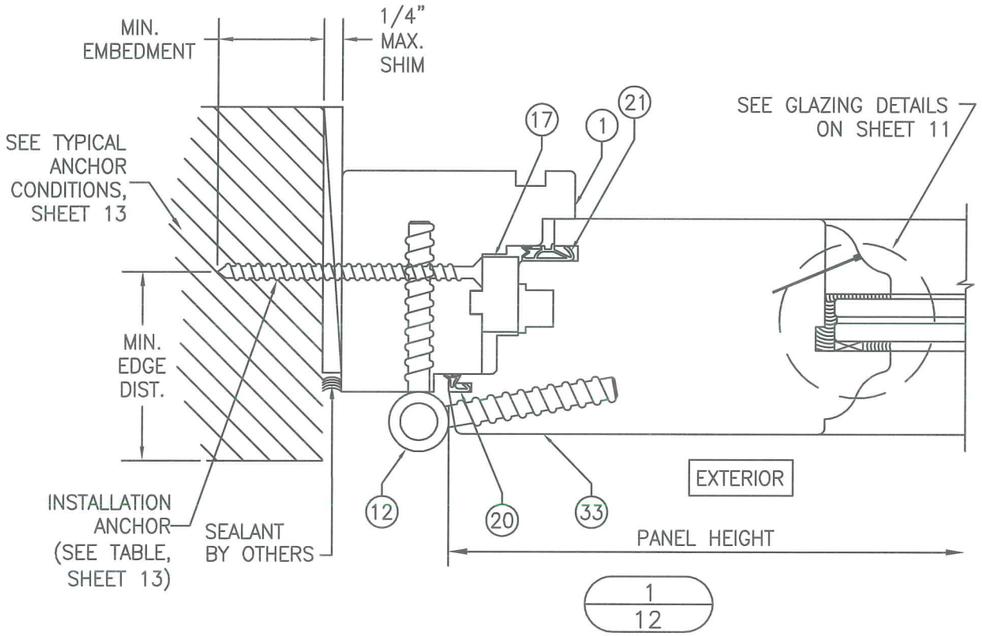

1/12

2/12

(FIXED/OPERABLE SHOWN, OPERABLE/OPERABLE SIMILAR)

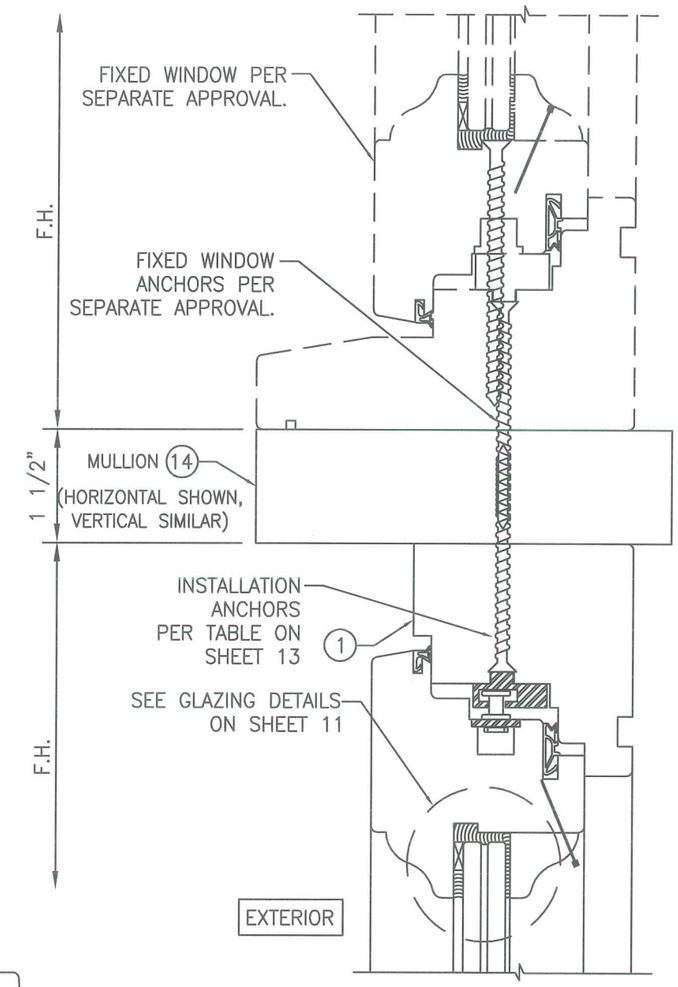

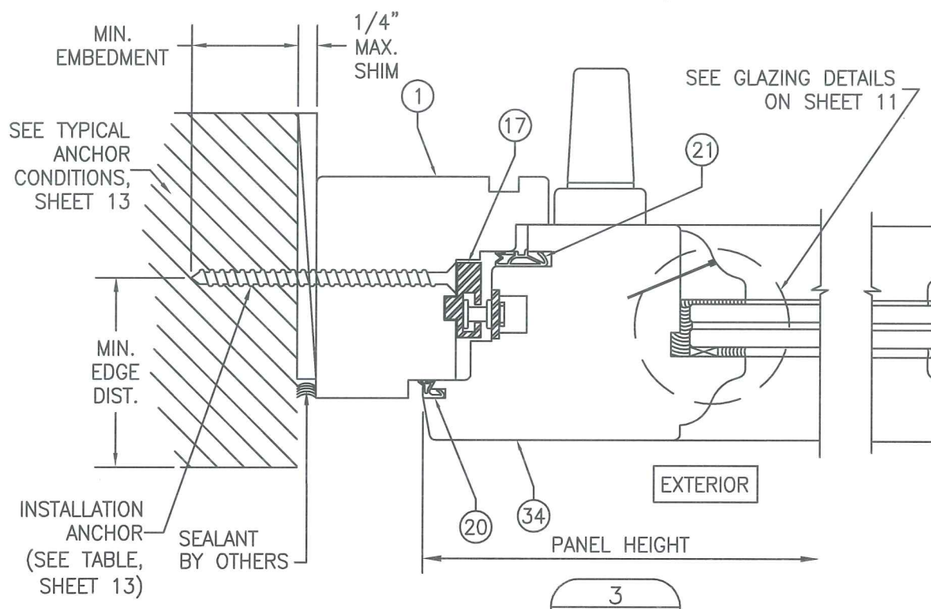

3/12

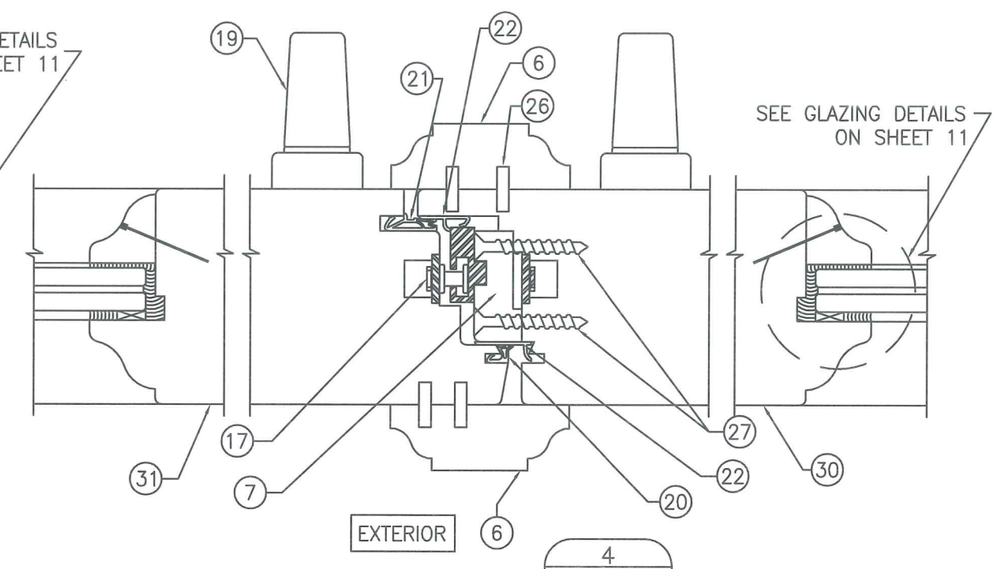

4/12

NO.	REVISION DESCRIPTION	DATE
1	UPDATED TO 2014 FBC	6/15/15

DATE: 2/26/14

12 FT EUROPEAN WOOD IMPACT OUTSWING CASEMENT WINDOWS

LÜXBAUM, LLC
WINDOWS + DOORS
2400 CENTREPARK WEST DR, SUITE 150
WEST PALM BEACH, FL 33409
Ph: (561) 684-1500
www.luxbaum.com

SCOTT WOLTERS
FL PE# 62354

WOLTERS ENGINEERING
(COA# 27194)
15211 97TH ROAD N
WEST PALM BEACH, FL 33412

SCOTT WOLTERS LICENSED PROFESSIONAL ENGINEER STATE OF FLORIDA
SEAL
JUN 15 2015

DRAWING NO.
CASEMENT WINDOW

SHEET NO.
12 OF 15

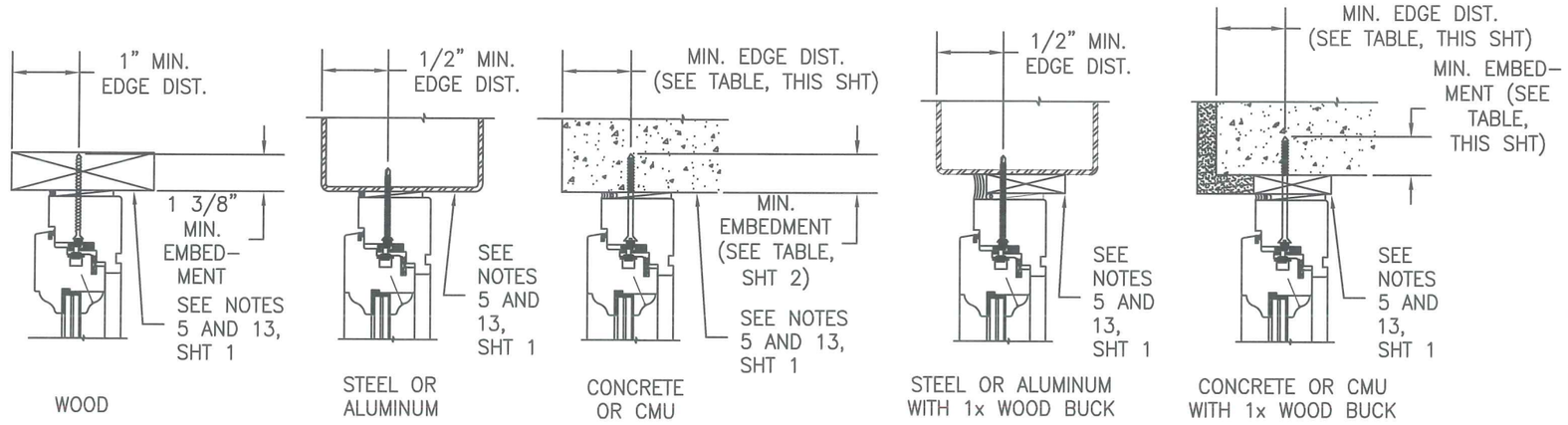

TYPICAL ANCHOR CONDITIONS

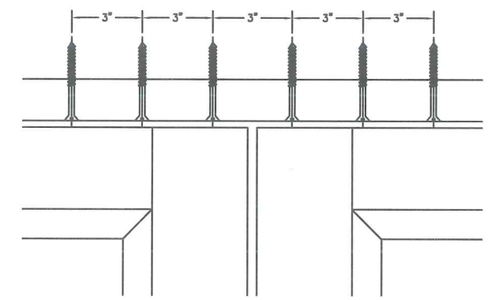

HEAD ANCHOR PATTERN 1
(SILL SIMILAR)

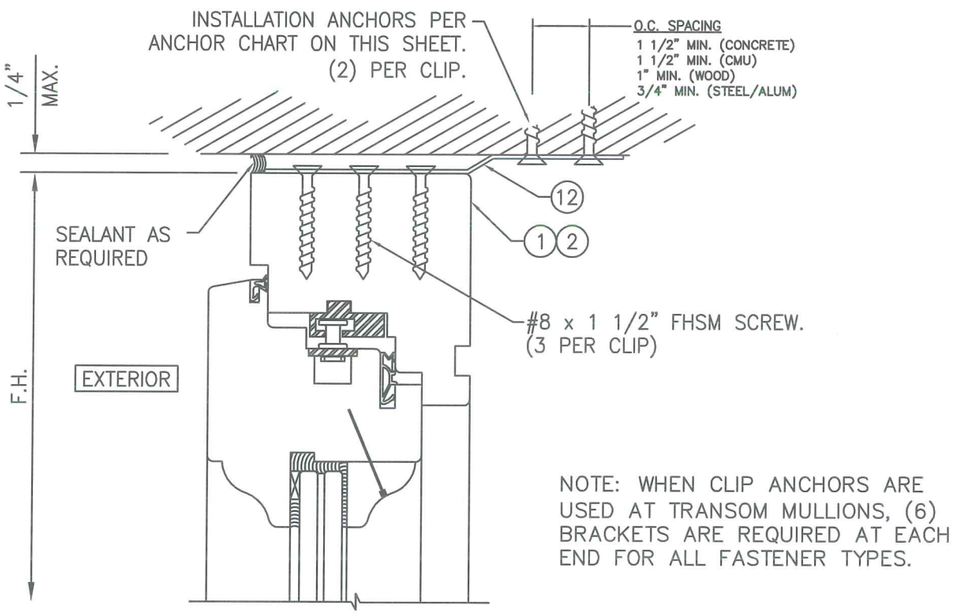

NOTE: WHEN CLIP ANCHORS ARE USED AT TRANSOM MULLIONS, (6) BRACKETS ARE REQUIRED AT EACH END FOR ALL FASTENER TYPES.

OPTIONAL CLIP ANCHOR DETAIL
(SILL AND JAMBS SIMILAR)

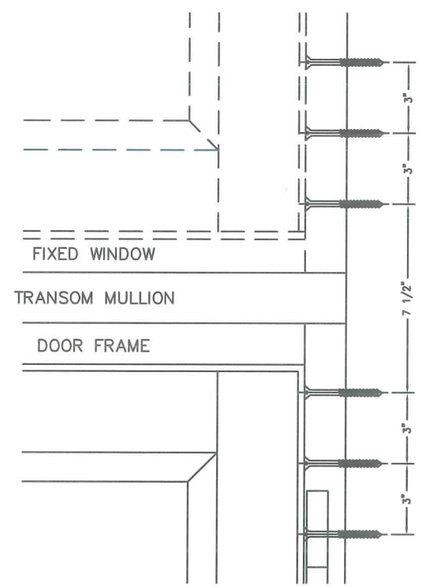

HORIZONTAL MULLION
ANCHOR PATTERN 2
(CMU AND WOOD)

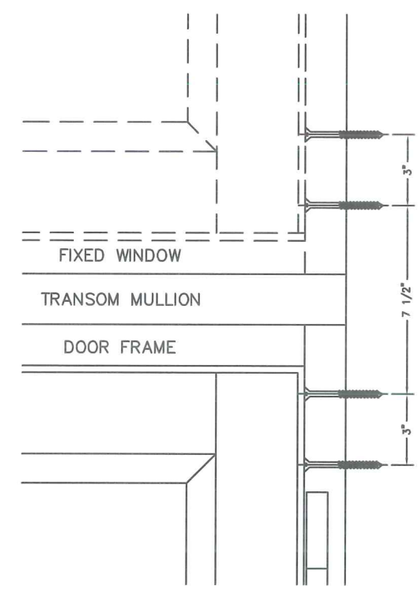

HORIZONTAL MULLION
ANCHOR PATTERN 2
(CONCRETE AND METAL)

INSTALLATION ANCHOR REQUIREMENTS TABLE

ID	SUBSTRATE	ANCHOR	MIN. EMBEDMENT	MIN. EDGE DISTANCE
A	CONCRETE OR GROUT-FILLED CMU (2850 PSI MIN)	1/4" ELCO COATED CARBON STEEL ULTRACON OR AGGRE-GATOR 300S	1 3/4"	2 1/2"
B	CONCRETE OR GROUT-FILLED CMU (2000 PSI MIN)	1/4" ITW COATED CARBON STEEL TAPCON	1 1/2"	3"
C	CONCRETE (3000 PSI MIN)	1/4" ITW 410 STAINLESS TAPCON	1 3/4"	2 1/2"
D	CONCRETE (3000 PSI MIN)	1/4" HILTI COATED CARBON STEEL OR STAINLESS STEEL KWIK-CON II	1"	2 1/2"
E	HOLLOW OR GROUT-FILLED CMU (ASTM C-90)	1/4" HILTI COATED CARBON STEEL OR STAINLESS STEEL KWIK-CON II	1"	2 1/2"

ID	SUBSTRATE	ANCHOR	MIN. EMBEDMENT	MIN. EDGE DISTANCE
F	2x MIN. SOUTHERN PINE WOOD (G=0.55 MIN)	#12 GRADE 5 WOOD SCREW	1 3/8"	1"
G	16 GAUGE (0.060") MIN. STEEL STUD 33 KSI YIELD MIN.	#12-24 ITW TEKS SELF-DRILLING SCREW	FULL	1/2"
H	1/8" ALUM. 6063-T5 MIN. OR 1/8" STEEL 33 KSI MIN.	#12 GRADE 5 SELF-TAPPING / DRILLING SCREW	FULL	1/2"

DATE: 2/26/14

NO.	REVISION DESCRIPTION	DATE
1	UPDATED TO 2014 FBC	6/15/15

12 FT EUROPEAN WOOD IMPACT OUTSWING CASEMENT WINDOWS

LÜXBAUM, LLC
WINDOWS + DOORS
2400 CENTREPARK WEST DR, SUITE 150
WEST PALM BEACH, FL 33409
Ph: (561) 684-1500
www.luxbaum.com

SCOTT WOLTERS LICENSE 62354 STATE OF FLORIDA PROFESSIONAL ENGINEER
JUN 15 2015

SCOTT WOLTERS
FL PE# 62354

WOLTERS ENGINEERING
(COA# 27194)
15211 97TH ROAD N.
WEST PALM BEACH, FL 33412

DRAWING NO.
CASEMENT WINDOW

SHEET NO.
13 OF 15

MERBAU WOOD: S.G. = 0.68
E = 2.6 x 10 psi
Sy = 21,300 psi
Fb = 12,780 psi

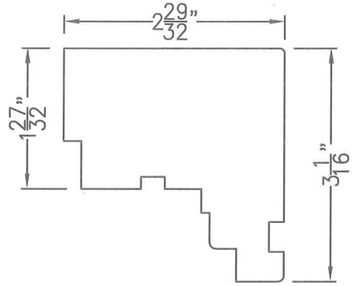

1 HEAD & SIDE JAMB

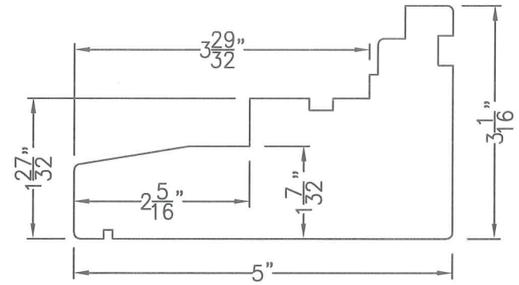

2 SILL JAMB

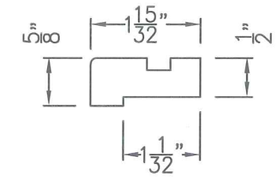

7 FILLET (MEETING STILE)

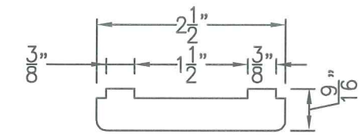

35 MULLION CAP

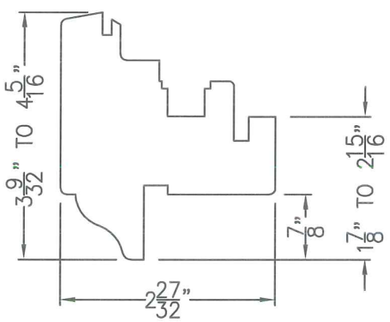

3 RAIL & STILE

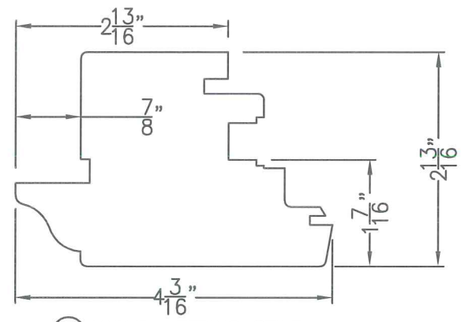

4 ACTIVE MEETING STILE

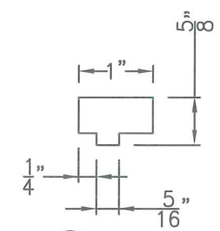

8 FILLET

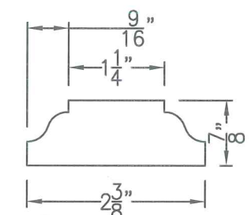

6 ASTRAGAL

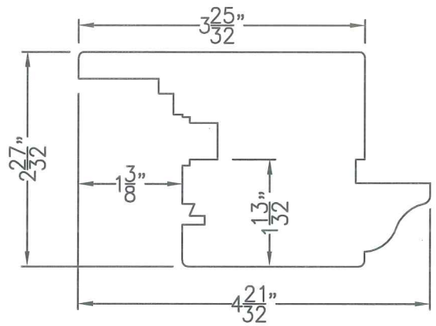

5 INACTIVE MEETING STILE

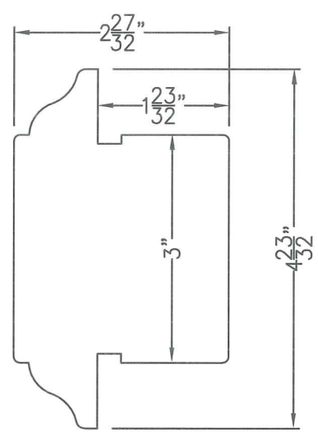

13 MID RAIL

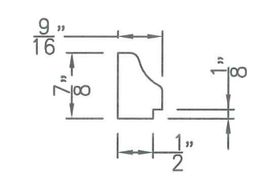

INSULATED
10 GLASS STOP

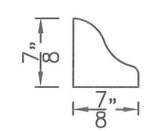

9 GLASS/PANEL STOP

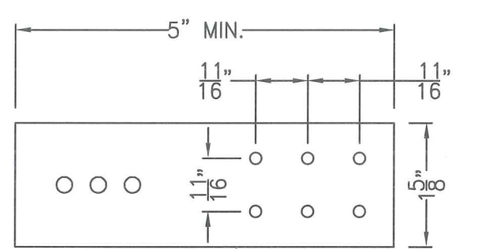

12 MOUNTING CLIP

THICKNESS = 0.060"

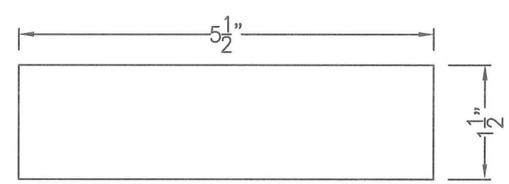

14 HORIZONTAL MULLION
(L = TRANSOM F.W.)

NO.	REVISION DESCRIPTION	DATE
1	UPDATED TO 2014 FBC	6/15/15

DATE: 2/26/14

12 FT EUROPEAN WOOD IMPACT OUTSWING CASEMENT WINDOWS

LÜXBAUM, LLC
WINDOWS + DOORS
2400 CENTREPARK WEST DR, SUITE 150
WEST PALM BEACH, FL 33409
Ph: (561) 684-1500
www.luxbaum.com

SCOTT WOLTERS
FL PE# 62354

WOLTERS ENGINEERING
(COA# 27194)
15211 97TH ROAD N
WEST PALM BEACH, FL 33412

SEAL: SCOTT WOLTERS LICENSED No 62354 STATE OF FLORIDA PROFESSIONAL ENGINEER

DRAWING NO.
CASEMENT WINDOW

SHEET NO.
14 OF 15

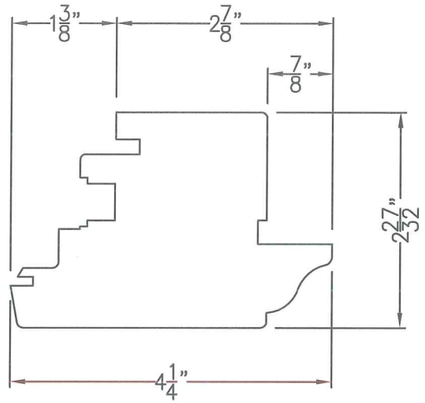

(34) ACTIVE RAIL

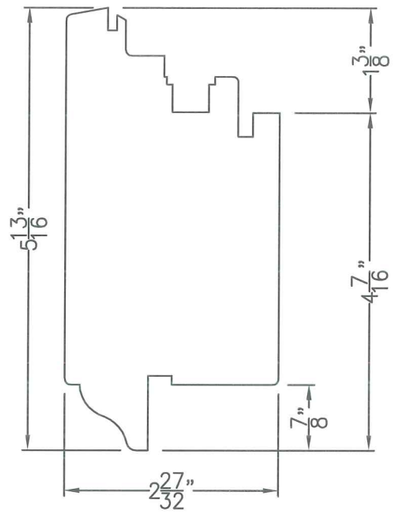

(33) HEAD & JAMB STILE

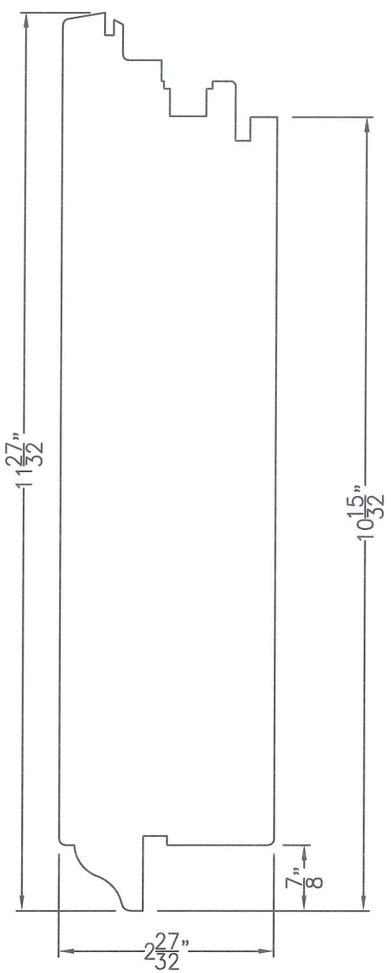

(32) BOTTOM STILE

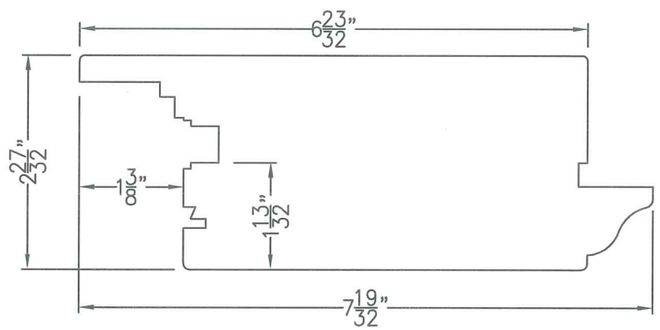

(30) INACTIVE MEETING STILE

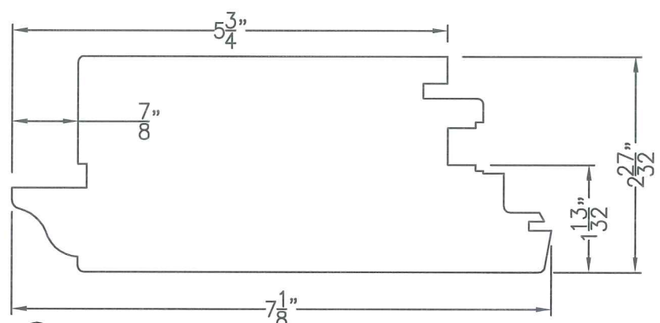

(31) ACTIVE MEETING STILE

ITEM #	PART	ITEM DESCRIPTION	MANUFACTURER/NOTES
		PARTS	
1	7478	HEAD & SIDE JAMB	MERBAU
2	78127	SILL JAMB	MERBAU
3	7283	RAIL & STILE (LARGE P/N 72109)	MERBAU
4	72106	ACTIVE MEETING STILE	MERBAU
5	72118	INACTIVE MEETING STILE	MERBAU
6	2260	ASTRAGAL	MERBAU
7	1637	FILLET (MEETING STILE)	MERBAU
8	1625	SPACER/FILLET	MERBAU
9	2223	GLASS/PANEL STOP	MERBAU
10	1522	GLASS STOP (I.G. GLASS)	MERBAU
12	–	MOUNTING CLIP	0.045" 316 STAINLESS STEEL (50 ksi)
13	72105	MID RAIL	MERBAU
14	–	MULLION (5 1/2" X 1 1/2")	MERBAU
30	72193	INACTIVE MEETING STILE	MERBAU
31	72181	ACTIVE MEETING STILE	MERBAU
32	72301	BOTTOM STILE	MERBAU
33	72148	HEAD & JAMB STILE	MERBAU
34	72109	ACTIVE RAIL (HANDLE SIDE)	MERBAU
35	1464	MULLION CAP	MERBAU
		HARDWARE	
15	–	HINGE	G–U HARDWARE 5020–SM
16	–	ALT. HINGE	BAKA C2–20
17	–	MULTI–POINT LOCK SET	SIEGENIA NO. 3/45M5 / 3/50M5
18	–	MULTI–POINT LOCK SET	G–U HARDWARE HWC–35 / HWC–40
19	–	HANDLE	AS REQUIRED TO OPERATE LOCKS
		SEALS AND SEALANTS	
20	–	COMPRESSION SEAL	DEVENTER SV33
21	–	COMPRESSION SEAL	DEVENTER SV12
22	–	COMPRESSION SEAL	DEVENTER S6544
		MISCELLANEOUS FASTENERS	
23	–	23 GAGE BRAD NAIL	4" FROM ENDS & 14" O.C.
24	–	23 GAGE BRAD NAIL	2" FROM CORNERS & 4" O.C.
25	–	NO. 12 X 3 1/2" SMS	4" FROM CORNERS & 12" O.C.
26	–	NO. 0 BISCUIT	4" FROM ENDS & 14" O.C.
27	–	NO. 8 X 1 1/2" SMS	4" FROM ENDS & 14" O.C. (2 ROWS)
28	–	1/16" X 1/4" NEOPRENE SHIM	1" FROM CORNERS & 8" O.C.
29	–	ALUMINUM INS. GLASS SPACER	CARDINAL I.G.

DATE: 2/26/14

NO.	REVISION DESCRIPTION	DATE
1	UPDATED TO 2014 FBC	6/15/15

12 FT EUROPEAN WOOD IMPACT OUTSWING CASEMENT WINDOWS

LÜXBAUM, LLC
WINDOWS + DOORS
2400 CENTREPARK WEST DR, SUITE 150
WEST PALM BEACH, FL 33409
Ph: (561) 684-1500
www.luxbaum.com

SCOTT WOLTERS LICENSE NO. 62354 STATE OF FLORIDA PROFESSIONAL ENGINEER
SEAL
JUN 15 2015

SCOTT WOLTERS
FL PE# 62354

WOLTERS ENGINEERING
(COA# 27194)
15211 97TH ROAD N
WEST PALM BEACH, FL 33412

DRAWING NO.
CASEMENT WINDOW

SHEET NO.
15 OF 15